Industriestraße 24 ▪ 65366 Geisenheim ▪ Germany
www.topcon-electronics.de ▪ dl-opus-info@topcon.com

Technical Data Sheet

OPUS A3 Eco / A3 Standard



1. Notes and Warnings

Attention!

This description is not a substitution for the concerned product's documentation. Please do read the documentation including the manuals carefully before dealing with this product. If the safety instructions in the documentation are not followed dangerous situation can occur that can result in damages, injuries and/or death by high voltage or wrong handling. In case you do not have the correct documentation, you can order it by contacting **dl-opus-info@topcon.com**. Only properly trained personnel with the correct qualifications are allowed to handle the device.

Attention!

Do not open the housing to avoid danger to high voltages. Before touching the electric assemblies make sure that the electricity is switched off completely. If the front panel is broken the device needs to be taken out of service due to risk of injury. If perceivable damages on the device exist that can compromise the functionality, it must be taken out of service due to the danger of malfunctions. These particularly include damages to the LCD display, damages to the keyboard, damages that compromise the protection level and damages to the encoder knobs

Please note:

All content is subject to change without notice.
Errors and omissions excepted.

Mounting and Handling

- Do not use the cable as a handle to carry the device.
- Mounting in clean working environment only. Dust and oil can harm the electric contacts and compromise the functionality.
- Do not mount the device under the use of violence because it can cause damage.
- The device must be mounted by trained personnel only into especially designed and tested system.
- The device may not be opened or disassembled.
- The device is to be cleaned with a moist fuzz free cotton cloth. If necessary, a mild cleaning agent may be used. Do not use acid or abrasive cleaning agents.
- The device is to be stored in a cool and dry environment and to be protected against
- sunshine.
- If the environmental temperature is beneath 10°C the reaction time of the display increases.

2. General Information

	OPUS A3 Eco Basic	OPUS A3 Eco Full	OPUS A3 Standard Basic	OPUS A3 Standard Full
Order Number: CAN=C++/Projektor CDS=Codesys ISO=ISO-VT CWV=Codesys WebVisu	OPUSA3EN1CANB000 OPUSA3EN1CANT000 OPUSA3EN1CDSB000 OPUSA3EN1CDST000 OPUSA3EN1ISOT000	OPUSA3EN1CANF000 OPUSA3EN1CDSF000 OPUSA3EN1CWVF000	OPUSA3SN1CANB000 OPUSA3SN1CDSB000 OPUSA3SN1ISOB000	OPUSA3SN1CANF000 OPUSA3SN1CDSF000 OPUSA3SN1ISOF000 OPUSA3SN1CWVF000
Dimensions	~142x98x47,7 mm		~198x98x64,7 mm	
Weight	~293 g		~426 g	
Housing	Plastic housing, colored light grey (RAL 7035) with black rubber frame.			
Mounting	landscape or portrait standalone in-dash			

3. Display

	OPUS A3 Eco Basic	OPUS A3 Eco Full	OPUS A3 Standard Basic	OPUS A3 Standard Full
Type:	TFT Color Graphic LCD with LED backlight			
Size:	4,3”, 95x53 mm			
Resolution:	480x272 px, 15:9			
Colors:	16.7 Mio.			
Brightness:	typ. 400 cd/m²			
Contrast Ratio:	typ. 400:1			
Optical Bonding:	no			

4. Input Devices

	OPUS A3 Eco Basic	OPUS A3 Eco Full	OPUS A3 Standard Basic	OPUS A3 Standard Full
Touch	Analog resistive (…T000 only)	Analog resistive	N/A	Analog resistive
Keypad	N/A		Left Keypad: 4 keys with tactile feedback Right Keypad: 4+3 keys with tactile feedback Electromechanical encoder with 16 mechanical detents and push function Lifetime 1.000.000 actuations	
Indicators and Sensors	Light Sensor 1 Multicolor LED		Light Sensor 1 Multicolor LED 2 Status LEDs	Light Sensor 1 Multicolor LED 3 Status LEDs

5. Electronics

	OPUS A3 Eco Basic	OPUS A3 Eco Full	OPUS A3 Standard Basic	OPUS A3 Standard Full
CPU	Freescale I.MX35®, 532 MHz			
Mass storage	512 MByte (approx. 450 MB for customer use)	1 GByte (approx. 900 MB for customer use)	512 MByte (approx. 450 MB for customer use)	1 GByte (approx. 900 MB for customer use)
RAM	128 MByte	256 MByte	128 MByte	256 MByte
EEPROM	32.768 Byte, 28.672 Byte available for user			
RTC	Buffered by battery		Buffered by gold cap	
Speaker/Buzzer	N/A	60 dB(A) in 30 cm distance Lifetime min 1000h	N/A	60 dB(A) in 30 cm distance Lifetime min 1000h

Power Supply	System supplied through terminal 30 (battery +, see pinout) and 31 (battery-, see pinout). Terminal 15 (ignition) to be used to switch on/off. Operating voltage range: 9 … 36 V DC. Short circuit protection. Over-voltage protection up to 48V for max. 2 minutes. Inverse polarity protection up to -48 V DC.

Current consumption (without external load), max

Power Mode	Current at 13,5 V DC	Current at 27 V
On	430 mA	240 mA
Low-power	160-430 mA	90-240 mA
Sleep	90 mA	55 mA
Off	< 3 mA	< 3 mA

6. Interfaces

	OPUS A3 Eco Basic	OPUS A3 Eco Full	OPUS A3 Standard Basic	OPUS A3 Standard Full
CAN Bus	2 x CAN-Interfaces according to ISO 11898, CAN-specification 2.0 B active, up to 1 Mbit/s (default 250 Kbit/s, 500 Kbit/s, 750 Kbit/s and 1 Mbit/s)			
RS232	1 x RS232-Interface Type: EIA232 (only RxD, TxD, GND) Speed: max. 115 Kbps			
USB	1x USB 2.0 Full Speed on Main Connector			1x USB 2.0 Full Speed on Main Connector 1x USB 2.0 High Speed on Front
Video-Interface	N/A	**Inputs**: 1 x analog **V_{ss}** 1 V **Camera supply**: 12 VDC **Max. current**: 500 mA	N/A	**Inputs**: 1 x analog **V_{ss}** 1 V **Camera supply**: 12 VDC **Max. current**: 500 mA
Ethernet Interface	N/A	1x 10/100 Mbit/s Base T	N/A	1x 10/100 Mbit/s Base T

Inputs	N/A	4 configurable analog/digital inputs **Input impedance** > 3k Ohm Resolution: 10 bit (1028 digits, 1 digit = 11,7 mV) **Voltage range**: 0…12 V **Over-voltage protection**: Up to 36 VDC **Short circuit protection**: Up to 36 VDC **Frequency**: Max. signal frequency 50 Hz	N/A	4 configurable analog/digital inputs **Input impedance** > 3k Ohm Resolution: 10 bit (1028 digits, 1 digit = 11,7 mV) **Voltage range**: 0…12 V **Over-voltage protection**: Up to 36 VDC **Short circuit protection**: Up to 36 VDC **Frequency**: Max. signal frequency 50 Hz
Outputs	N/A	3 digital outputs **Short circuit protection**: Up to 36 V $\mathbf{I_{max}}$ 300 mA open drain $\mathbf{R_{DS,on}}$ < 1 Ohm $\mathbf{R_{DS,off}}$ > 100 kOhm	N/A	3 digital outputs **Short circuit protection**: Up to 36 V $\mathbf{I_{max}}$ 300 mA open drain $\mathbf{R_{DS,on}}$ < 1 Ohm $\mathbf{R_{DS,off}}$ > 100 kOhm
Audio	N/A			

7. Connectors

	OPUS A3 Eco Basic	OPUS A3 Eco Full	OPUS A3 Standard Basic	OPUS A3 Standard Full
Main	Tyco-AMP 1437288-6 Mating connector (customer) Tyco-AMP 3-1437290-7 Mating crimp contact (customer) Tyco-AMP 3-1447221-4 Dummy Plug (customer) Tyco AMP 4-1437284-3			
Video	N/A	M12 round connector, female, 5- pole, B-coded, acc. To EN 61076-2-101 Recommended mating connector type according to IEC 61076-2-10: MM 005-Gx1-B x) A, C, I, P, R or S-type	N/A	M12 round connector, female, 5- pole, B-coded, acc. To EN 61076-2-101 Recommended mating connector type according to IEC 61076-2-10: MM 005-Gx1-B x) A, C, I, P, R or S-type
Ethernet	N/A	M12 round connector, female, 4-pole, D-coded, acc. To EN 61076-2-101 Recommended mating connector type according to IEC 61076-2-10: MM 004-Gx1-D x) A, C, I, P, R or S-type	N/A	M12 round connector, female, 4-pole, D-coded, acc. To EN 61076-2-101 Recommended mating connector type according to IEC 61076-2-10: MM 004-Gx1-D x) A, C, I, P, R or S-type

8. Software

	OPUS A3 Eco Basic	OPUS A3 Eco Full	OPUS A3 Standard Basic	OPUS A3 Standard Full
Operating System	Linux Kernel 3.0.0 or higher			
Application Programming	OPUS Projektor Tool CODESYS C/C++ ISO-VT (OPUS-Projektor)			

9. Testing and Verification

CE-Compliance

EU Directive 2014/30/EU (EMC) according to:

- EN 12895: Industrial Trucks – Electromagnetic compatibility
- EN 13309: Construction machinery – Electromagnetic compatibility of machines with internal electrical power supply
- EN ISO 14982: Agricultural and forestry machinery - Electromagnetic compatibility - Test methods and acceptance criteria

E1 – Type approval

EU Directive ECE R 10

Protection Level (IP Code)

IP 65 and IP 66 according to ISO 20653: Road Vehicles – Degrees of protection (IP-Code) – Protection of electrical equipment against foreign objects, water and access

FCC

„This device complies with part 15 of the FCC Rules. Operation is subject to the following two conditions: (1) This device may not cause harmful interference, and (2) this device must accept any interference received, including interference that may cause undesired operation. “

Electrical

12 and 24V-Systems according to ISO 16750-2: Road Vehicles – Environmental conditions and testing for electrical and electronic equipment – Electrical loads

- ISO 15003: Agricultural Engineering – Electrical and electronic equipment – Testing resistance to environmental conditions

Mechanical

- ISO 16750-3: Road Vehicles – Environmental conditions and testing for electrical and electronic equipment – Mechanical loads, Code L
- ISO 15003: Agricultural Engineering – Electrical and electronic equipment – Testing resistance to environmental conditions
  - Mechanical Shock: Level 2
  - Random Vibration: Level 2
  - Sinusoidal Vibration: Level 2

Climate

- ISO 16750-4: Road Vehicles – Environmental conditions and testing for electrical and electronic equipment – Climatic Loads
  - Operating Temperature Range: -30 … +65°C
  - Storage Temperature Range: -40 … +85°C
- ISO 15003: Agricultural Engineering – Electrical and electronic equipment – Testing resistance to environmental conditions

10. Pinout

Main connector pinout

	OPUS A3 Basic			OPUS A3 Full	
Pin No.	**Assignment**	**Description**		**Assignment**	**Description**
1	VCC	supply voltage +; terminal 30		VCC	supply voltage +; terminal 30
2	Ignition Input	ignition input; terminal 15		Ignition Input	ignition input; terminal 15
3	GND	supply voltage -; terminal 31		GND	supply voltage -; terminal 31
4	CarGND	grounding		CarGND	grounding
5	n. c.	Not connected		n. c.	Not connected
6	n. c.	Not connected		n. c.	Not connected
7	n. c.	Not connected		n. c.	Not connected
8	CAN1H	CAN 1 high		CAN1H	CAN 1 high
9	CAN1L	CAN 1 low		CAN1L	CAN 1 low
10	CAN2H	CAN 2 high		CAN2H	CAN 2 high
11	CAN2L	CAN 2 low		CAN2L	CAN 2 low
12	USB_VCC	USB +5V DC supply		USB_VCC	USB +5V DC supply
13	USB_GND	USB supply ground		USB_GND	USB supply ground
14	USB_D-	USB Data line -		USB_D-	USB Data line -
15	USB_D+	USB Data line +		USB_D+	USB Data line +
16	RS232 RxD	RS232 receive data		RS232 RxD	RS232 receive data
17	RS232 TxD	RS232 transmit data		RS232 TxD	RS232 transmit data
18	RS232 GND	RS232 ground		RS232 GND	RS232 ground
19	n. c.	Not connected		A/DI3	analog/digital input 3
20	n. c.	Not connected		A/DI1	analog/digital input 1
21	n. c.	Not connected		A/DI2	analog/digital input 2
22	n. c.	Not connected		A/DI4	analog/digital input 4
23	SERV_EN	service enable		SERV_EN	service enable
24	n. c.	Not connected		DO3	digital output 3
25	n. c.	Not connected		DO1	digital output 1
26	n. c.	Not connected		DO2	digital output 2

View on the rear side of the A3

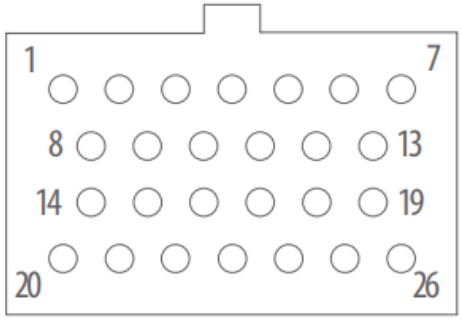

Video connector

Pin No.	Assignment
1	VidSig +
2	Camera control output
3	Camera supply +12VDC
4	Camera supply GND
5	VidSig GND

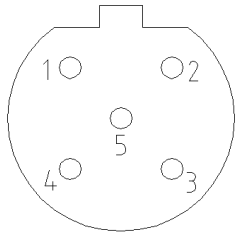

Video Connector, M12, female, 5 pins, b-coded

Ethernet connector

Pin No.	Assignment
1	TD+
2	RD+
3	TD-
4	RD-

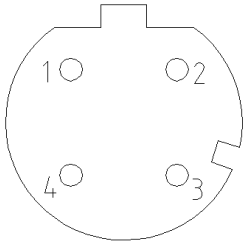

Ethernet Connector, M12, female, 4 pins, d-coded

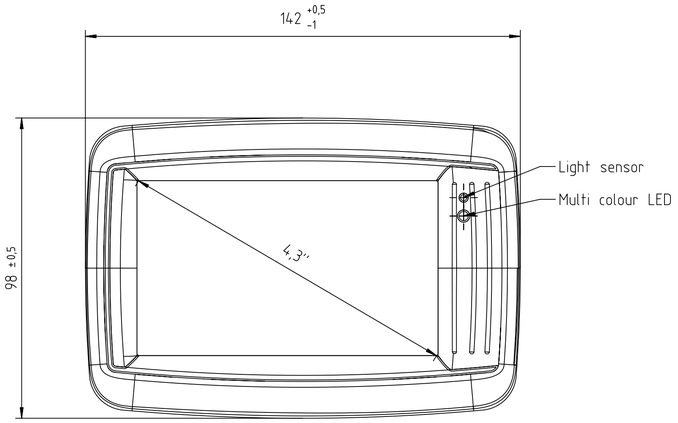

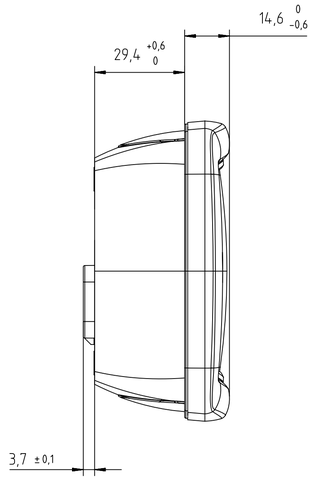

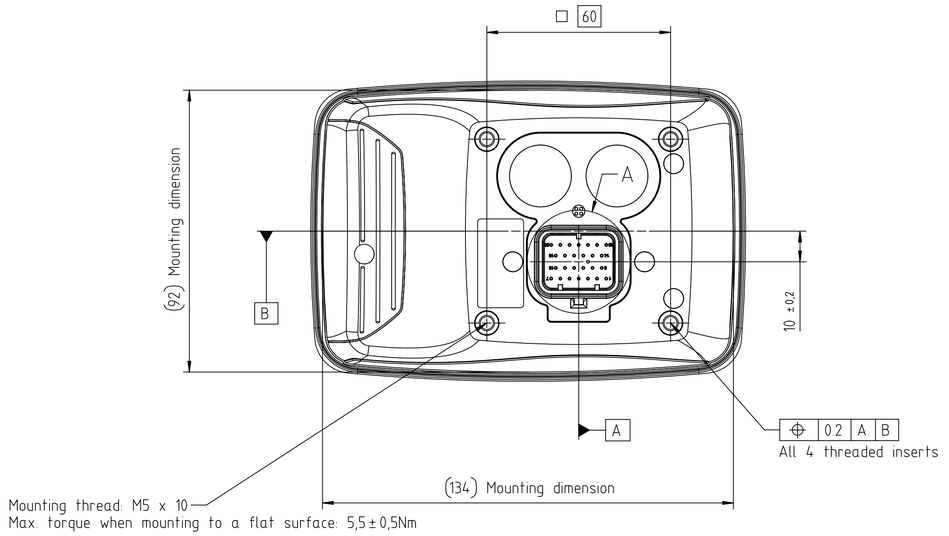

Colouration:

Front plate soft component: RAL 9005
Front plate hard component: RAL 7035

Back shell: RAL 7035

Pin assignement main connector	
Pin-Number	Assignement
1	VCC (Clamp 30)
2	Zündung (Clamp 15)
3	GND (Clamp 31)
4	CarGND (Ground)
5	not connected
6	not connected
7	not connected
8	CAN1H
9	CAN1L
10	CAN2H (not utilised)
11	CAN2L (not utilised)
12	USB_VCC
13	USB_GND
14	USB_D-
15	USB_ D+
16	RS232: RxD (not utilised)
17	RS232: TxD (not utilised)
18	RS232: GND (not utilised)
19	not connected
20	not connected
21	not connected
22	not connected
23	Serv_EN
24	not connected
25	not connected
26	not connected

A (2:1)

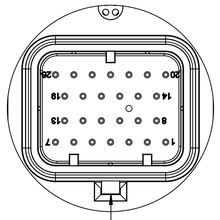

Connector cable side:
Tyco Electronics AMP Super Seal 3-1437290-7
Crimp contacts:
Tyco Electronics 3-1447221-4

BA	First draft	09.11.2017	FR
Rev.	Change	Date	Name

Revision History

General note
- All dimensions after painting / coating / plating
- The complete geometry and missing dimensions have to be taken from the 3D-CAD-file
- All applicable documents (see PPAP-Report) have to be considered

All dimensions in mm		Projection	Surface quality	
Allowed deviation	Surface			
General tolerance	DIN EN ISO 1302		Outer edges	√ 63
-			Inner edges	√ 63

For this drawing all rights are reserved. Delivery to third party, copying and otherwise misuse is forbidden. (Protection against) Unfair Competition Act

Scale: 1:1 (Weight): - kg

Material: TPE / PC+ABS
(Material number): -

	Date	Name
Drawn	09.11.2017	FR
Checked	-	-
Norm	-	-

Part name

OPUS A3 Eco Basic

Topcon Electronics GmbH & Co. KG
Industriestr. 7
65366 Geisenheim
Germany
www.topcon-electronics.de

PN Topcon Electronics
OPUSA3EL1000B0000_BA

Sheet 1

PN Topcon
-

Rev. -

Size A1

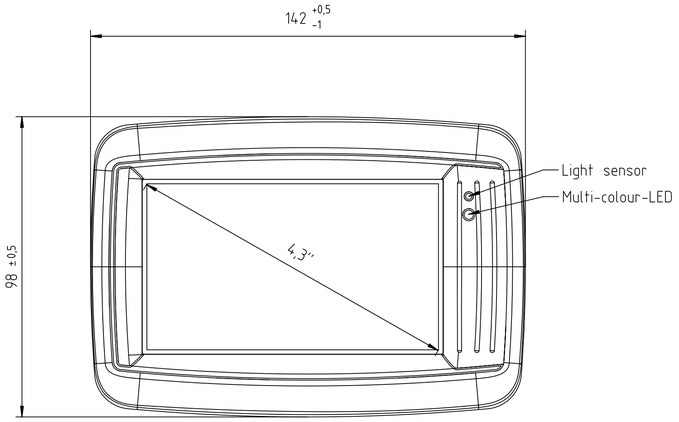

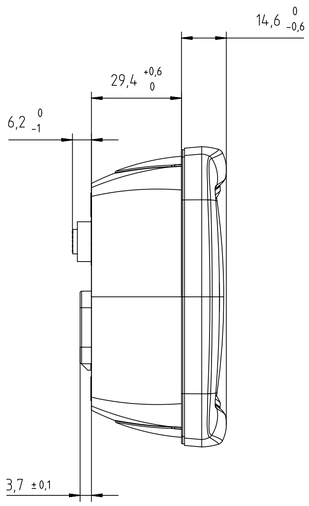

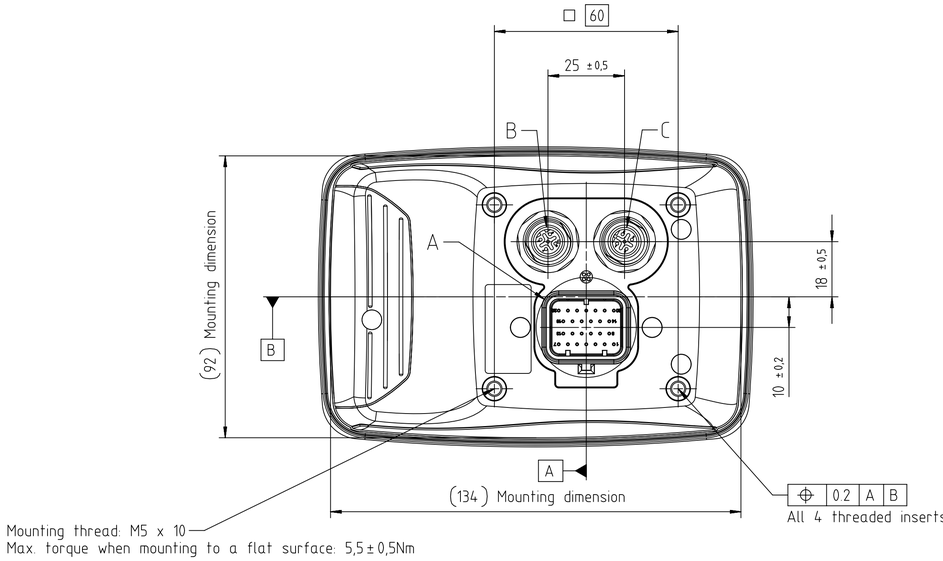

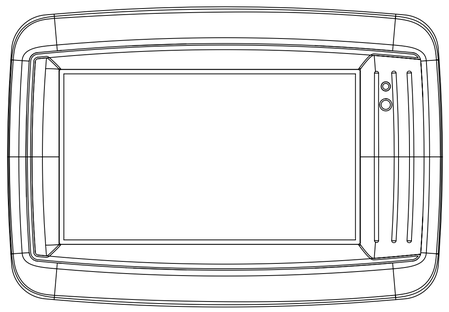

Colouration:

Front plate soft component: RAL 9005
Front plate hard component: RAL 7035

Back shell: RAL 7035

Pin assignement main connector	
Pin-Number	Assignement
1	VCC (Clamp 30)
2	Zündung (Clamp 15)
3	GND (Clamp 31)
4	CarGND (Ground)
5	not connected
6	not connected
7	not connected
8	CANH
9	CANL
10	CAN2H (not utilised)
11	CAN2L (not utilised)
12	USB_VCC
13	USB_GND
14	USB_D-
15	USB_ D+
16	RS232: RxD (not utilised)
17	RS232: TxD (not utilised)
18	RS232: GND (not utilised)
19	not connected
20	not connected
21	not connected
22	not connected
23	Serv_EN
24	not connected
25	not connected
26	not connected

A (2:1)

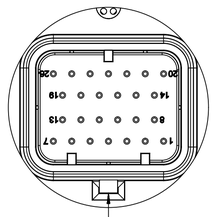

Connector cable side:
Tyco Electronics AMP Super Seal 3-1437290-7
Crimp contacts:
Tyco Electronics 3-1447221-4

B (5:1)

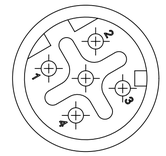

M12 Ethernet round connector D-coded
Cable side connnector acc. to IEC 61076-2-101

Pin assignement Ethernet-Connector	
Pin Number	Assignement
1	VidSig +
2	N.c.
3	Camera +
4	Camera -
5	VidSig GND

C (5:1)

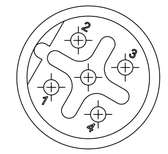

M12 Video round connector B-coded
Cable side connnector acc. to IEC 61076-2-101

Pin assignement Video-Connector	
Pin Number	Assignement
1	TD +
2	RD +
3	TD -
4	RD -

Scope of application
For this drawing all rights are reserved. Delivery to third party, copying and otherwise misuse is forbidden. (Protection against) Unfair Competition Act

Allowed deviation: General tolerance Size ISO 14405 E ISO
Surface: DIN EN ISO 1302
Scale: 1:1 (Weight): - kg
Material: TPE / PC+ABS
(Material number): -

Rev	Change	Date	Name
-	-	-	-
-	-	-	-
-	-	-	-
-	-	-	-
-	-	-	-
-	-	-	-
-	-	-	-
-	-	-	-
-	-	-	-

	Date	Name
Drawn	14.07.2016	FR
Checked	-	-
Norm	-	-

WACHENDORFF Elektronik
TOPCON POSITIONING GROUP
Industriestr. 3
65366 Geisenheim
www.wachendorff-elektronik.de

Part name: OPUS A3 ECO Full Option universal
Item number: OPUSA3EL1000F0000_BA
Sheet: 1
A1
Storage location: -

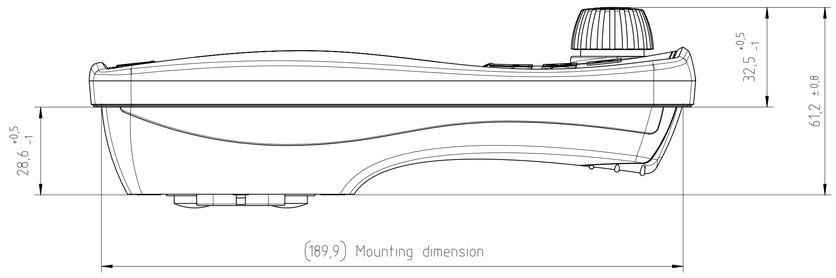

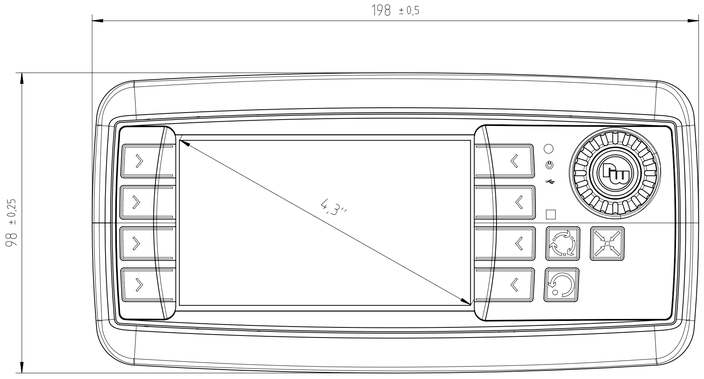

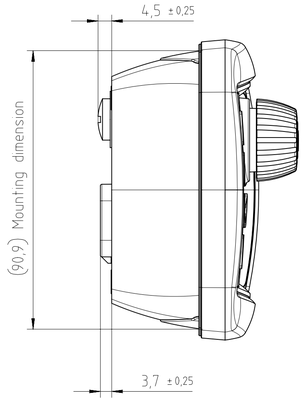

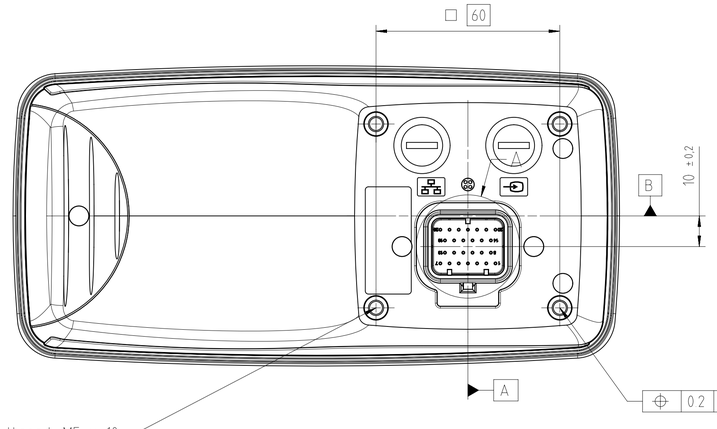

Mounting thread: M5 x 10
Max. mounting torque when mounting to a flat surface: 5,5 ± 0,5Nm

All 4 threaded inserts

Colouration:

Front plate soft component: RAL 9005
Front plate hard component: RAL 7035

Back shell: RAL 7035

Pin assignement main connector	
Pin-Number	Assignement
1	VCC (Clamp 30)
2	Zündung (Clamp 15)
3	GND (Clamp 31)
4	CarGND (Ground)
5	not connected
6	not connected
7	not connected
8	CAN1H
9	CAN1L
10	CAN2H (not utilised)
11	CAN2L (not utilised)
12	USB_VCC
13	USB_GND
14	USB_D-
15	USB_ D+
16	RS232 RxD (not utilised)
17	RS232 TxD (not utilised)
18	RS232 GND (not utilised)
19	not connected
20	not connected
21	not connected
22	not connected
23	Serv_EN
24	not connected
25	not connected
26	not connected

A (2:1)

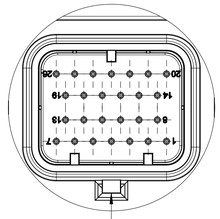

Connector cable side:
Tyco Electronics AMP Super Seal 3-1437290-7
Crimp contacts:
Tyco Electronics 3-1447221-4

Scope of application
For this drawing all rights are reserved. Delivery to third party, copying and otherwise misuse is forbidden. (Protection against) Unfair Competition Act

Allowed deviation: General tolerance Size: ISO 14405 E ISO
Surface: DIN EN ISO 1302

Scale: 1:1 (Weight): - kg
Material: TPE / PC+ABS
(Material number): -

Rev.	Change	Date	Name
-	-	-	-
-	-	-	-
-	-	-	-
-	-	-	-
-	-	-	-
-	-	-	-
-	-	-	-
-	-	-	-
-	-	-	-
-	-	-	-

	Date	Name
Drawn	28.09.2016	FR
Checked	-	-
Norm	-	-

WACHENDORFF Elektronik
TOPCON POSITIONING GROUP
Industriestr. 7
65366 Geisenheim
www.wachendorff-elektronik.de

Part name: OPUS A3 Standard Basic neutral

Item number: OPUSA3SN1000B0000_ _AC

Sheet: 1
A1

Storage location: -

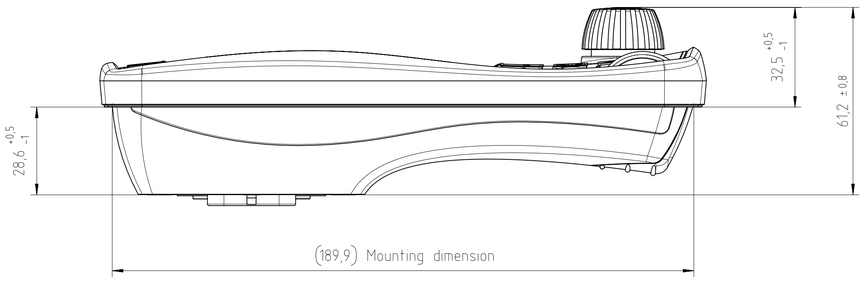

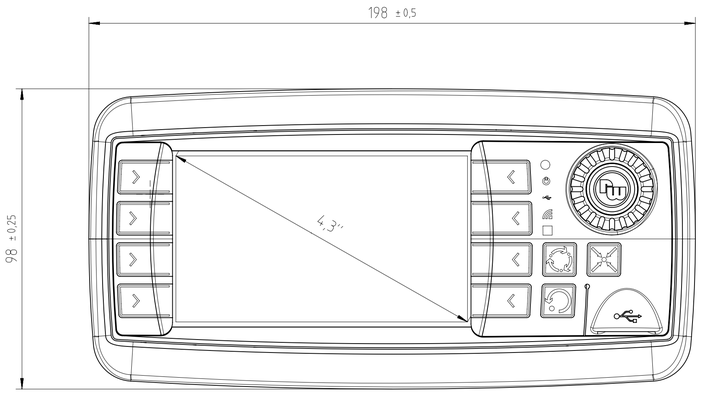

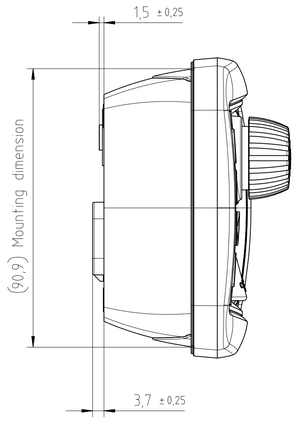

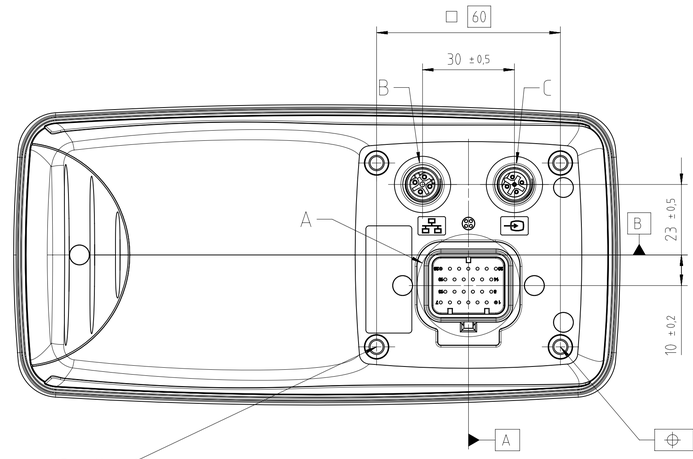

Mounting thread: M5 x 10
Max. mounting torque when mounting to a flat surface: 5,5 ± 0,5Nm

All 4 threaded inserts

Colouration:

Front plate soft component: RAL 9005
Front plate hard component: RAL 7035

Back shell: RAL 7035

Pin assignement main connector	
Pin-Number	Assignement
1	VCC (Clamp 30)
2	Zündung (Clamp 15)
3	GND (Clamp 31)
4	CarGND (Ground)
5	not connected
6	not connected
7	not connected
8	CAN1H
9	CAN1L
10	CAN2H (not utilised)
11	CAN2L (not utilised)
12	USB_VCC
13	USB_GND
14	USB_D-
15	USB_ D+
16	RS232 RxD (not utilised)
17	RS232 TxD (not utilised)
18	RS232 GND (not utilised)
19	not connected
20	not connected
21	not connected
22	not connected
23	Serv_EN
24	not connected
25	not connected
26	not connected

A (2:1)

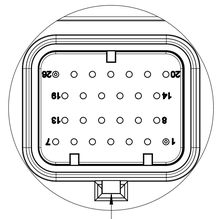

Connector cable side:
Tyco Electronics AMP Super Seal 3-1437290-7
Crimp contacts:
Tyco Electronics 3-1447221-4

B (2:1)



M12 Ethernet round connector D-coded
Cable side connnector acc. to IEC 61076-2-101

Pin assignement Ethernet-Connector	
Pin Number	Assignement
1	VidSig +
2	N.c
3	Camera +
4	Camera -
5	VidSig GND

C (2:1)



M12 Video round connector B-coded
Cable side connnector acc. to IEC 61076-2-101

Pin assignement Video-Connector	
Pin Number	Assignement
1	TD +
2	RD +
3	TD -
4	RD -

Scope of application	Allowed deviation	Surface	Scale: 1:1	(Weight): - kg
For this drawing all rights are reserved Delivery to third party, copying and otherwise misuse is forbidden (Protection against) Unfair Competition Act	General tolerance Size ISO 14405 E ISO	DIN EN ISO 1302	Material: TPE / PC+ABS (Material number): -	
		Date / Name	Part name	
	Drawn	19.09.2016 FR	OPUS A3 Standard Full Option universal	
	Checked	- -		
	North	- -		
WACHENDORFF Elektronik TOPCON POSITIONING GROUP Industriestr. 7 65366 Geisenheim www.wachendorff-elektronik.de			Item number: OPUSA3SN1000F0000_AC	Sheet 1 A1
Rev. Change Date Name			Storage location: -	