Industriestraße 24 ▪ 65366 Geisenheim ▪ Germany
www.topcon-electronics.de ▪ dl-opus-info@topcon.com

Technical Data Sheet

OPUS A6 G2 Redesign Eco / Standard





1. Notes and Warnings

Attention!

This description is not a substitution for the concerned product's documentation. Please do read the documentation including the manuals carefully before dealing with this product. If the safety instructions in the documentation are not followed, dangerous situation can occur that can result in damages, injuries and/or death by high voltage or wrong handling. In case you do not have the correct documentation, you can order it by contacting **opus-support@topcon.com**. Only properly trained personnel with the correct qualification is allowed to handle the device.

Attention!

Do not open the housing to avoid danger to high voltage. Before touching the electric assemblies make sure that the electricity is switched off completely. If the front panel is broken the device needs to be taken out of service due to risk of injury. If perceivable damages on the device exist that can compromise the functionality, it must be taken out of service due to the danger of malfunctions. These particularly include damages to the LCD display, damages to the keyboard, damages that compromise the protection level and damages to the encoder knobs.

Please note:

All content is subject to change without notice. Errors and omissions excepted.

Mounting and Handling

- Do not use the cable as a handle to carry the device.
- Mounting in clean working environment only.
- Do not mount the device under the use of violence because it can cause damage.
- The device must be mounted by trained personnel only into specially designed and tested system.
- The device may not be opened or disassembled.
- The device is to be cleaned with a moist fuzz free cotton cloth. If necessary, a mild cleaning agent may be used. Do not use acid or abrasive cleaning agents.
- The device is to be stored in a cool and dry environment and to be protected against sunshine.
- If the environmental temperature is beneath 10°C the reaction time of the display increases.
- Picture sticking is possible at higher temperatures if no screensaver is used

2. General Information

	OPUS A6 Eco Basic	OPUS A6 Eco Full	OPUS A6 Standard Basic	OPUS A6 Standard Full
Order Number: CAN=C++/Projektor CDS=Codesys ISO=ISO-VT CWV=Codesys WebVisu	OPUSA6EN2CDSB000 OPUSA6EN2CANT000 OPUSA6EN2CDST000	OPUSA6EN2CANF000 OPUSA6EN2CDSF000	OPUSA6SN2CANB000 OPUSA6SN2CDSB000	OPUSA6SN2CANF000 OPUSA6SN2CDSF000 OPUSA6SN2ISOF000 OPUSA6SN2CWVF000
Dimensions	224 x 145 x 54 mm		267 x 145 x 54 mm	
Weight	~1.137 g		~1.294 g	
Housing	Front cover: PC/ABS, colored light grey (RAL 7035) with black rubber frame. Back cover: aluminum die cast, colored light grey (RAL 7035)			
Mounting	landscape or portrait standalone in-dash			

3. Display

	OPUS A6 Eco Basic	OPUS A6 Eco Full	OPUS A6 Standard Basic	OPUS A6 Standard Full
Type:	TFT Color Graphic LCD with LED backlight			
Size:	7'', 152.4 mm (W) x 91.4 mm (H)			
Resolution:	800 x 480 px (WVGA), 15:9			
Colors:	16.7 Mio.			
Brightness:	typ. 850 cd/m²			
Contrast Ratio:	typ. 1.000:1			
Optical Bonding:	yes			
Polarization:	Circular. Visible with polarized sunglasses in each mounting position			

4. Input Devices

	OPUS A6 Eco Basic	OPUS A6 Eco Full	OPUS A6 Standard Basic	OPUS A6 Standard Full
Touch	PCT (…T000 only)	PCT	N/A	PCT
Keypad	N/A		Left Keypad: 6 keys with tactile feedback Right Keypad: 6+4 keys with tactile feedback Encoder: Optical encoder with 16 mechanical detents and push function Lifetime: 1.000.000 actuations All keypads and encoder knob with multicolor LED backlight	
Indicators and Sensors	Light Sensor 1 Multicolor LED 2 Status LEDs	Light Sensor 1 Multicolor LED 3 Status LEDs	Light Sensor 1 Multicolor LED 2 Status LEDs	Light Sensor 1 Multicolor LED 3 Status LEDs

5. Electronics

	OPUS A6 Eco Basic	OPUS A6 Eco Full	OPUS A6 Standard Basic	OPUS A6 Standard Full
CPU	Freescale I.MX6®solo, 800 MHz			
Mass storage	2 GByte (minus space for OS & application)	4 GByte (minus space for OS & application)	2 GByte (minus space for OS & application)	4 GByte (minus space for OS & application)
RAM	512 MByte			
EEPROM	32.768 Byte, 28.672 Byte available for user			
RTC	Buffered by gold cap			
Speaker	80 dB @ 1kHz in 1 m distance			

Speaker frequency range	840 Hz to 6 kHz
Power Supply	System supplied through terminal 30 (battery +, see pinout) and 31 (battery -, see pinout). Terminal 15 (ignition) to be used to switch on/off. Operating voltage range: 9 … 36 V DC. Short circuit protection. Over-voltage protection up to 48 V for max. 2 min. Inverse polarity protection up to -48 V DC for max. 5 min.

Current consumption (without external load), max

Power Mode	Current at 13,5 V DC	Current at 27 V
On	≤ 1000 mA	≤ 600 mA
Low Power	320 – 1000 mA	190 – 600 mA
Sleep	≤ 100 mA	≤ 95 mA
Off	≤ 2 mA	≤ 2 mA

6. Interfaces

	OPUS A6 Eco Basic	OPUS A6 Eco Full	OPUS A6 Standard Basic	OPUS A6 Standard Full
CAN Bus	2 x CAN-Interface according to ISO 11898, CAN-specification 2.0 B active, up to 1 Mbit/s (default 250 Kbit/s, 500 Kbit/s, 750 Kbit/s, 1 Mbit/s)			
RS232	1 x RS232-Interface Type: EIA232 (only RxD, TxD, GND) Speed: max. 115 Kbps			
USB	Main connector: 1x USB 2.0 High Speed			Main connector: 1x USB 2.0 High Speed Front connector: 1x USB 2.0 High Speed
Video-Interface	Inputs: 1 x analog V_{ss}:1 V Camera supply: 12 VDC Max. current: 500 mA	Inputs: 3 x analog V_{ss}: 1 V Camera supply: 12 VDC Max. current: 500 mA	Inputs: 1 x analog V_{ss}: 1 V Camera supply: 12 VDC Max. current: 500 mA	Inputs: 3 x analog V_{ss}: 1 V Camera supply: 12 VDC Max. current: 500 mA

Ethernet Interface	1 x 10/100 Mbit/s Base T			
Inputs	N/A	4 configurable analog/digital inputs **Input impedance** > 3 kΩ **Resolution:** 10 bit (1024 digits, 1 digit = 11,7 mV) **Voltage range**: 0…12 V **Over-voltage protection**: Up to 36 VDC **Short circuit protection**: Up to 36 VDC **Frequency**: Max. signal frequency 50 Hz, Input 1, max. signal frequency 10 kHz	N/A	4 configurable analog/digital inputs **Input impedance** > 3 kΩ **Resolution:** 10 bit (1024 digits, 1 digit = 11,7 mV) **Voltage range**: 0…12 V **Over-voltage protection**: Up to 36 VDC **Short circuit protection**: Up to 36 VDC **Frequency**: Max. signal frequency 50 Hz, Input 1, max. signal frequency 10 kHz
Outputs	N/A	3 digital outputs **Short circuit protection**: Up to 36 V I_{max} 300 mA open drain $R_{DS,on}$ < 1 Ω $R_{DS,off}$ > 100 Ω	N/A	3 digital outputs **Short circuit protection**: Up to 36 V I_{max} 300 mA open drain $R_{DS,on}$ < 1 Ω $R_{DS,off}$ > 100 kΩ
Audio	N/A	1 Audio output (left, right, GND) AC97 compatible Output power approx.65 mW @ 32 Ω	N/A	1 Audio output (left, right, GND) AC97 compatible Output power approx.65 mW @ 32 Ω

7. Connectors

	OPUS A6 Eco Basic	OPUS A6 Eco Full	OPUS A6 Standard Basic	OPUS A6 Standard Full
Main	TE-AMP 1437288-6 Mating types: Connector: TE-AMP 3-1437290-7 Crimp contact: TE-AMP 3-1447221-4 Dummy Plug: TE-AMP 4-1437284-3			
Video	M12 round connector, female, 5-pole, B-coded, acc. to EN 61076-2-101 Recommended mating connector type according to IEC 61076-2-10: MM 005-Gx1-B x) A, C, I, P, R or S-type			
Ethernet	M12 round connector, female, 4-pole, D-coded, acc. to EN 61076-2-101 Recommended mating connector type according to IEC 61076-2-10: MM 004-Gx1-D x) A, C, I, P, R or S-type			

8. Software

	OPUS A6 Eco Basic	OPUS A6 Eco Full	OPUS A6 Standard Basic	OPUS A6 Standard Full
Operating System	Linux Kernel 6.1 or higher			
Application Programming	OPUS Projektor Tool CODESYS C/C++ ISO-VT (OPUS-Projektor)			

9. Testing and Verification

CE-Compliance

EU Directive 2014/30/EU (EMC) according to:

- EN ISO 14982: Agricultural and forestry machinery – Electromagnetic compatibility – Test methods and acceptance criteria
- EN ISO 13766-1: Earth-moving and building construction machinery
- EN 12895 Industrial trucks - Electromagnetic compatibility
- EN 61000-6-2/4 - EMC for Industrial environments
- EN 50498: Electromagnetic compatibility (EMC). Product family standard for aftermarket electronic equipment in vehicles

E1 – Type approval

EU Directive ECE R 10.6

FCC Compliance (USA)

Suppliers Declaration of Conformity (SDoC) acc. to Subpart B of Part 15 of the FCC rules (CFR Title 47)

ISED Compliance (Canada)

Suppliers Declaration of Conformity (SDoC) acc. to ICES-Gen 3.3, Class A device

EMC Emission radiated

Frequency	Limit
30 - 75 MHz	62-52[1]dB(µV/m)-QP-120kHz 52-42[1]dB(µV/m)-AV-120kHz
75-400 MHz	52-63[2]dB(µV/m)-QP-120kHz 42-53[3]dB(µV/m)-AV-120kHz
400 - 1000 MHz	63 dB(µV/m) - QP - 120 kHz 53 dB(µV/m) - AV - 120 kHz
1000 - 2500 MHz	73 dB(µV/m) - P - 120 kHz 53 dB(µV/m) - AV - 120 kHz
2500 MHz - 6000 MHz	80 dB(µV/m) - P - 1000 kHz 63 dB(µV/m) - QP - 120 kHz

QP: Quasi-Peak

AV: Average

P: Peak

1: Value decreases linearly with the logarithm of the frequency.

2: Value increases linearly with the logarithm of the frequency.

EMC Immunity radiated

Frequency	Limit / Modulation	Standard
20 - 200 MHz	60 mA / AM	Bulk current injection (ISO 11452-4)
200 - 800 MHz	30 V/m / AM	Absorber lined shielded enclosure (ISO 11452-2)
800 MHz - 1200 MHz	30 V/m / PM type 1	Absorber lined shielded enclosure (ISO 11452-2)
1200 MHz - 1400 MHz	30 V/m / PM type 2	Absorber lined shielded enclosure (ISO 11452-2)
1400 MHz - 2000 MHz	30 V/m / PM type 1	Absorber lined shielded enclosure (ISO 11452-2)
2000 MHz - 2700 MHz	15 V/m / PM type 1	Absorber lined shielded enclosure (ISO 11452-2)
2700 MHz - 6000 MHz	15 V/m / PM type 2	Absorber lined shielded enclosure (ISO 11452-2)

EMC Emission conducted

Frequency	Limit Average	Limit Peak
0,15 - 0,30 MHz	66 dBµV, BW=9kHz	79 dBµV, BW=9kHz
0,30 - 0,53 MHz	60 dBµV, BW=9kHz	73 dBµV, BW=9kHz
0,53 - 5,9 MHz	50 dBµV, BW=9kHz	70 dBµV, BW=9kHz
5,9 - 26 MHz	45 dBµV, BW=9kHz	65 dBµV, BW=9kHz
26 - 68 MHz	30 dBµV, BW=9kHz	
26 - 41 MHz		56 dBµV, BW=9kHz
41 - 88 MHz		46 dBµV, BW=120kHz
68 - 100 MHz	30 dBµV, BW=120kHz	
88 - 100 MHz		50 dBµV, BW=120kHz

EMC transient emissions

	12V-System	24V-System
Positive slow pulses:	< +25V	< +25V
Negative slow pulses:	< -50V	< -100V
Positive fast pulses:	< +50V	< +100V
Negative fast pulses:	< -75V	< -100V

Pulse tests

	12 V-System	24 V-System
Test Pulse 1	U_S = -112V; FS: C	U_S = -600V; FS: C
Test Pulse 2a	U_S = +55V; FS: A	U_S = +55V; FS: A
Test Pulse 2b	U_S = +10V; FS: C	U_S = +20V; FS: C
Test Pulse 3a	U_S = -220V; FS: A	U_S = -300V; FS: A
Test Pulse 3b	U_S = +150V; FS: A	U_S = +300V; FS: A
Test Pulse 4 (Starting profile)	U_{S1} = 6V; U_S = 6.5 V FS: B	U_{S1} = 6V; U_S = 10V FS: B
Load Dump	U_s = +79V; FS: C	U_s = +151V; FS: C

Electrostatic Discharge

Packaging and handling test	330Ω / 150pF Direct discharge: ±8kV, FS=A Air discharge: ±15kV, FS=A	
Powered-up test, direct discharge	2kΩ / 150pF, 2kΩ / 330pF Direct discharge:±8kV,FS=A Air discharge: ±15kV, FS=A acc. to ISO 10605	2kΩ / 150pF, 2kΩ / 330pF Direct discharge:±8kV,FS=A Air discharge: ±15kV, FS=A acc. to ISO 61000-4-2
Powered-up test, indirect discharge	150pF / 330Ω; Indirect discharge: ±8kV, FS=A	

Burst

t_r=5ns; t_d=50ns; Burst duration: 15ms;

Period: 300ms; t=5min; FS: B

Power-lines: U_S=±1kV

Signal-lines: U_S=±1kV

Surge

Power-lines: U_S= ±0.5kV t_r=1.2us t_d=50us	Wait-time: 60s Amount: 5 FS: B

Electrical

Inverse Polarity resistance 5min @ -48V

Over current protection USB and Video supply output: 150% overcurrent capable

Over voltage resistance 5min @ +48V

Temperature step test

T_{start} = +20°C
T_{min} = -30°C
T_{max} = +65°C

t_{Dwell} = 15min each
ΔT = 5°C

FS: A, after each startup

Short circuit strength Connect each Pin of Main-, Video- and Ethernet-Connector for 5 Min to GND and for 5 Min to 36V; FS: C

Superimposed alternating voltage

frequency sweep: 50Hz-25kHz-50Hz inside 120s; 5 times; FS: A

Level	12V	24V
AC peak-to-peak U_{PP1}	$1V_{AC}$	$1V_{AC}$
AC peak-to-peak U_{PP2}	$2V_{AC}$	$4V_{AC}$
AC peak-to-peak U_{PP3}	$4V_{AC}$	$10V_{AC}$

De-/Increase Supply Voltage

Starting with 9V, linear reduction of voltage with 0.5V/min until 0V is reached.

After that linear increase with 0.5V/min till Umin is reached again.

FS:A @ U > 8V, FS:C otherwise

Drop in Supply Voltage

12V System	24V System
$U_{Start}=U_{Min}$; U_S=4.5V td=100ms; FS: B	$U_{Start}=U_{Min}$; U_S=9V td=100ms; FS: B

Operating voltage

Test Voltages: 9V, 13.5V, 27V, 36V

Test Time: 8h per Voltage

EMC Susceptibility conducted

f = 0.15 - 80MHz	Modulation: AM 80%, 1kHz
$U = 10V_{rms}$	via capacitive clamp
Δf = 0,01 decade	
T_{dwell} = 2s	FS: A

Batteryless operation

12V System	24V System
U_1=10V; U_2=18V; t=5min; FS: A	U_1=20V; U_2=38V; t=5min; FS: A

ISO-VT power discontinuity

2 ms interruption of 12V power supply

No loss of normal network communications or in-process messages, no processor reset, no loss of volatile data

Mechanical

Vibration, noise

Frequency [Hz]	PSD [(m/s²)/Hz]
10	18
20	36
30	36
139	1.69
200	2
300	1
2000	1

32h per Axis; FS: A

Vibration, sinusoidal

Frequency	Resonance search	Resonance test	Endurance test
f_{Start} = 10 Hz f_{Stop} = 2000 Hz	a = 10 m/s² Δf = 0.1 octave/min	a = 50 m/s² t = 30 min for each resonance	a = 50 m/s² Δf = 0.5 octave/min t = 8h per axis

Mechanical shock

Part 1: 300m/s², 18ms, 3 times per axis/direction

Part 2: 500m/s², 6ms, 10 times per axis/direction

Part 3: 400m/s², 6ms, 4000 times per axis/direction

Drop Test

Drop the DUT on each side and each edge from a height of 1m on a concrete floor.

No damage or visible damage

Package Drop

Drop the DUT inside the package on each side and each edge from a height of 1m on a concrete floor.

No damage of the DUT / No cracks to the package

Climate

Protection Level (IP Code)

IP 6k5 and 6k6 according to ISO 20653: Road Vehicles – Degrees of protection (IP-Code) – Protection of electrical equipment against foreign objects, water and access

Salt spray resistance

Part 1: 7 cycles, 24h each (8h spraying; 16h rest) salt concentration: 5%

Part 2: 4 cycles at 168h as seen in diagram

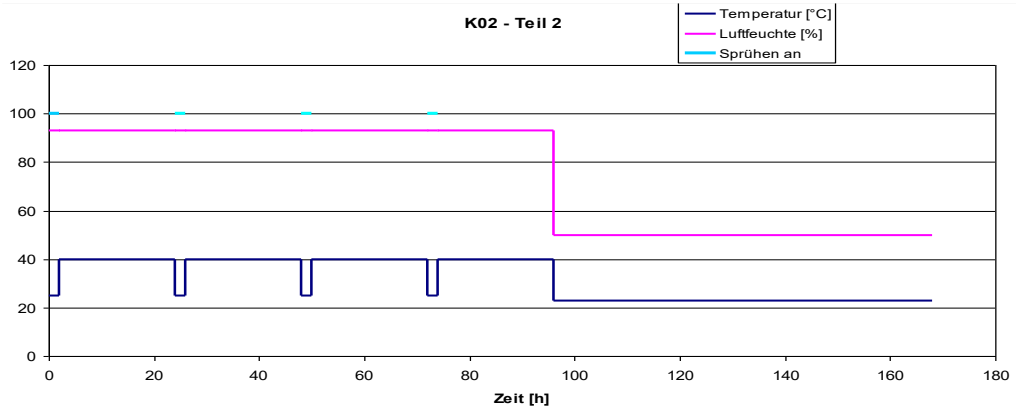

Chemical resistance

Test acc. to ISO 15003:

Diesel fuel (100%)	Petrol (100%)	Hydraulic oil (100%)	NPK fertiliser (7,5% N, 7,5% P, 7,5% K), saturated solution
Liquid lime (10%)	Ethylene glycol (50% aqueous solution)	Ammonium hydroxide (20% aqueous solution)	Urea

Test acc. to ISO 16750-5:

Runway de-icer	Urea	Cavity protection	Protective lacquer
Protective lacquer remover	Windscreen washer fluid	Vehicle washing chemicals	Interior cleaner
Glass cleaner	Wheel cleaner	Cold cleaning agent	Acetone
Battery fluid	Denatured alcohol	Transpiration	Cosmetic product (Cream)
Refreshment containing caffeine and sugar	Ammonium containing cleaner		

Damp heat steady

21days @+40°C and 93%r.H.; FS: C

Damp heat cyclic

6 cycles (each 24h); T_{Low}=+25°C; T_{High}=+55°C

Humidity: >= 93%r.H.; FS: A

Temperature/Humidity cyclic

10 cycles (each 24h); TLow=-10°C; THigh=+65°C

Humidity: = 80-96%r.H or uncontrolled.; FS: A

Operating temperature	**Storage temperature**
24h @ -30°C; FS: A	24h @ -40°C; FS: C
96h @ +65°C; FS: A	48h @ +85°C; FS: C

Temperature cycling

3 cycles (each 8h); T_{Low}=-30°C; T_{High}=+65°C; FS: A

according to ISO 15003

30 cycles (each 8h); T_{Low}=-30°C; T_{High}=+65°C; FS: A

according to ISO 16750-4

Dewing effect

T_{High} = 80°C,	H_{High} = 98%
T_{Low} = +25°C	H_{Mid} = 80%
5 cycles (each 5h);	

Ice water shock

T_{DUT} = +65°C	T_{Dwell} = 60 min
T_{Water} = 0 to +4°C	T_{Splash} = 3 sec
V_{Water} = 3 to 4 l	100 Cycles

Temperature shock

10 cycles (each 30min); T_{Low}=-40°C; T_{High}=+85°C; T_{change}: <30s; FS: C

UV resistance

Over-all time: 1500h

Cycle: 8h UV at +60°C, 4h 95%r.H.

No material damage, No visible change

Corrosive gas

H_2S 10 ppB	T = +30°C
NO_2 200 ppB	H = 75% r.H.
Cl_2 10 ppB	Duration: 21 days
SO_2 200 ppB	

Air pressure

t1: 7-8h	Duration: 24h
t2: 3-4h	
PA: 80kPa	
PB: 100kPa	

10. Pinout

Main connector pinout

	OPUS A6 Basic			OPUS A6 Full	
Pin No.	**Assignment**	**Description**		**Assignment**	**Description**
1	VCC	supply voltage +; terminal 30		VCC	supply voltage +; terminal 30
2	Ignition Input	ignition input; terminal 15		Ignition Input	ignition input; terminal 15
3	GND	supply voltage -; terminal 31		GND	supply voltage -; terminal 31
4	CarGND	grounding		CarGND	grounding
5	n. c.	not connected		Audio Out - L	audio output, left channel
6	n. c.	not connected		Audio Out - R	audio output, right channel
7	n. c.	not connected		Audio Out - GND	audio ground
8	CAN1H	CAN 1 high		CAN1H	CAN 1 high
9	CAN1L	CAN 1 low		CAN1L	CAN 1 low
10	CAN2H	CAN 2 high		CAN2H	CAN 2 high
11	CAN2L	CAN 2 low		CAN2L	CAN 2 low
12	USB_VCC	USB +5V supply		USB_VCC	USB +5V supply
13	USB_GND	USB supply GND		USB_GND	USB supply GND
14	USB_D-	USB data -		USB_D-	USB data -
15	USB_D+	USB data +		USB_D+	USB data +
16	RS232 RxD	RS232 receive data input		RS232 RxD	RS232 receive data input
17	RS232 TxD	RS232 transmit data output		RS232 TxD	RS232 transmit data output
18	RS232 GND	RS232 GND		RS232 GND	RS232 GND
19	n. c.	not connected		A/DI3	analog/digital input 3
20	n. c.	not connected		A/DI1	analog/digital input 1
21	n. c.	not connected		A/DI2	analog/digital input 2
22	n. c.	not connected		A/DI4	analog/digital input 4
23	SERV_EN	service enable		SERV_EN	service enable
24	n. c.	not connected		DO3	digital output 3
25	n. c.	not connected		DO1	digital output 1
26	n. c.	not connected		DO2	digital output 2

View on the rear side of the A6

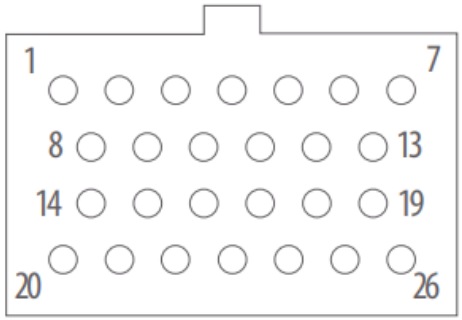

OPUS displays in the industrial sector are only intended to be used with cable length less than 30 meters.

Video connector

Pin No.	Assignment
1	VidSig+
2	Camera control output
3	Camera supply +12VDC
4	Camera supply GND
5	VidSig GND

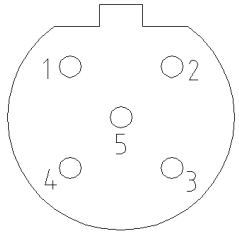

Video Connector, M12, female, 5 pins, b-coded,

Ethernet connector

Pin No.	Assignment
1	TD+
2	RD+
3	TD-
4	RD-

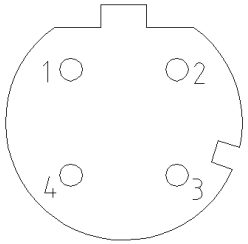

Ethernet Connector, M12, female, 4 pins, d-coded,

Revisions Topcon			
Rev.	Date	Description	ECO

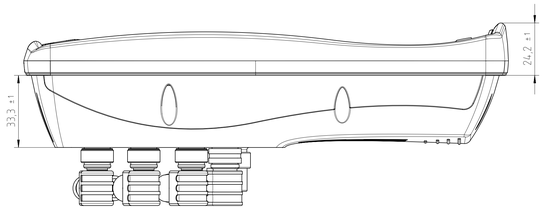





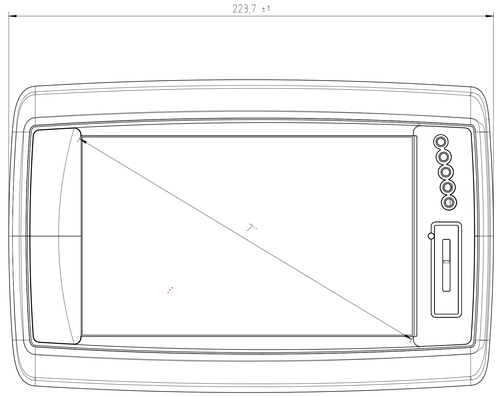

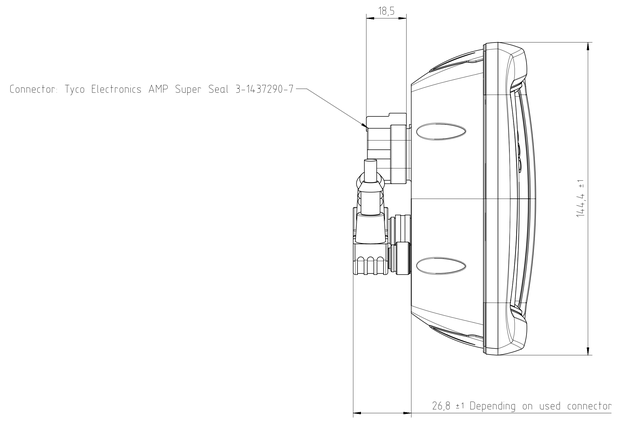

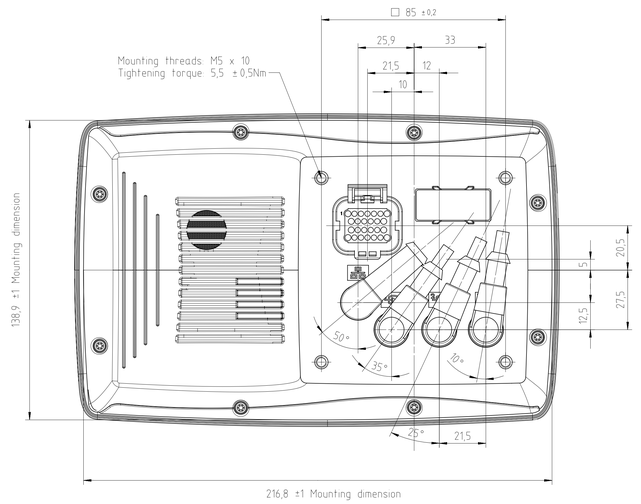

-	revised design		12-01-2021	TB
Rev.	Change		Date	Name

Revision History

General note
- All dimensions after painting / coating / plating
- The complete geometry and missing dimensions have to be taken from the 3D-CAD-file
- All applicable documents (see PPAP-Report) have to be considered

All dimensions in mm	Projection	Surface quality
Allowed deviation DIN 16742-TG1	Surface DIN EN ISO 1302	Outer edges
Size ISO 14405 E		Inner edges

Scope of application	Scale: 1:1	(Weight): - kg
For this drawing all rights are reserved. Delivery to third party, copying and reproduction only with permission. Protection against Unfair Competition Act	Material: - (Material number): -	

	Date	Name
Drawn	05.10.2018	TB
Checked	-	-
Norm	-	-

Part name: OPUS A6 G2 ECO FULL

TOPCON
Topcon Electronics GmbH & Co. KG
Industriestr. 7
65366 Geisenheim
Germany
www.topcon-electronics.de

PPN Topcon Electronics: OPUSA6EN2XXXFXXX — Sheet: 2

PPN Topcon: - — Rev.: - — Size: A0

Revisions Topcon			
Rev.	Date	Description	ECO

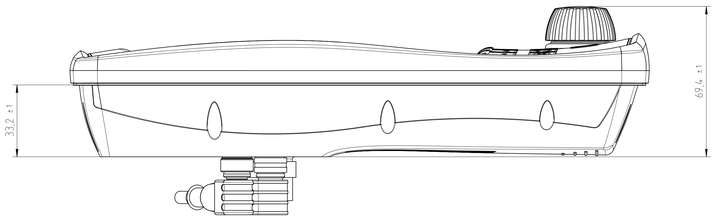





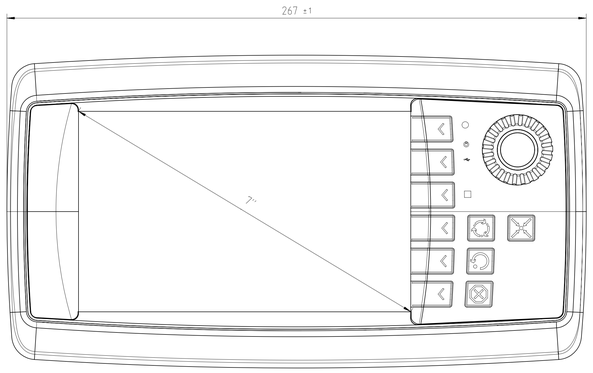

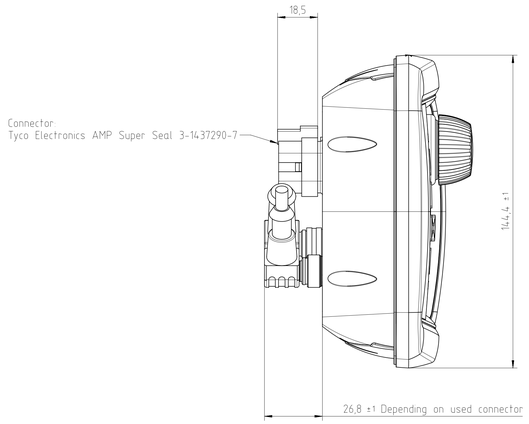

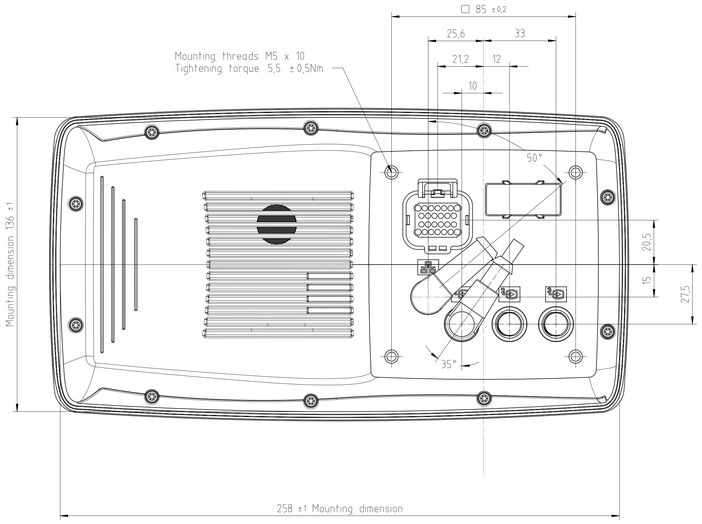

-	revised design	11-01-2021	TB
Rev.	Change	Date	Name

Revision History

General note
- All dimensions after painting / coating / plating
- The complete geometry and missing dimensions have to be taken from the 3D-CAD-file
- All applicable documents (see PPAP-Report) have to be considered

All dimensions in mm		Projection	Surface quality
Allowed deviation DIN 16742-TG5 Size ISO 14405 Ⓔ	Surface DIN EN ISO 1302		Outer edges Inner edges

Scope of application
For this drawing all rights are reserved
Delivery to third party, copying and otherwise misuse of Topcon
(Protection against Unfair Competition Act

Scale: 1:1 | (Weight): - kg
Material: -
(Material number): -

	Date	Name
Drawn	22.03.2016	TB
Checked	-	-
Norm	-	-

Part name
OPUS A6 G2 STANDARD BASIC

TOPCON
Topcon Electronics GmbH & Co. KG
Industriestr. 7
65366 Geisenheim
Germany
www.topcon-electronics.de

PIN Topcon Electronics	Sheet
OPUSA6SN2XXXBXXX	1
PIN Topcon	Rev. / Size
-	- / A0

Revisions Topcon			
Rev.	Date	Description	ECO

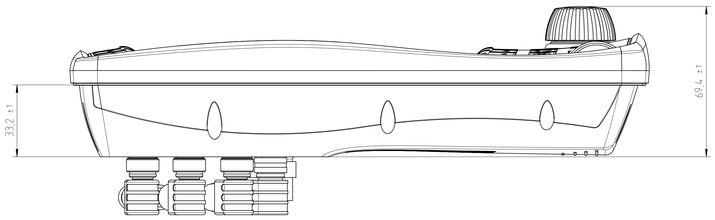



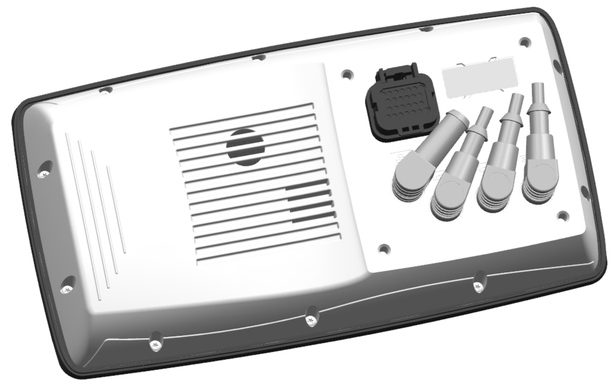

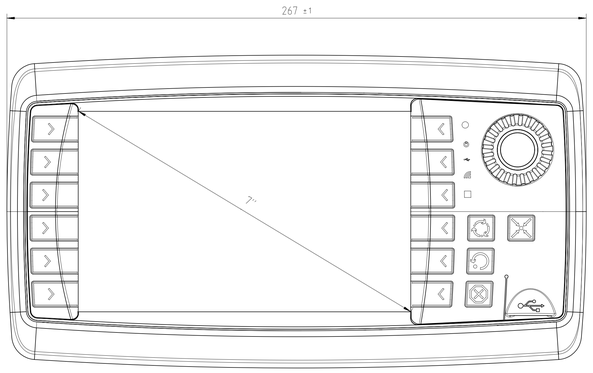

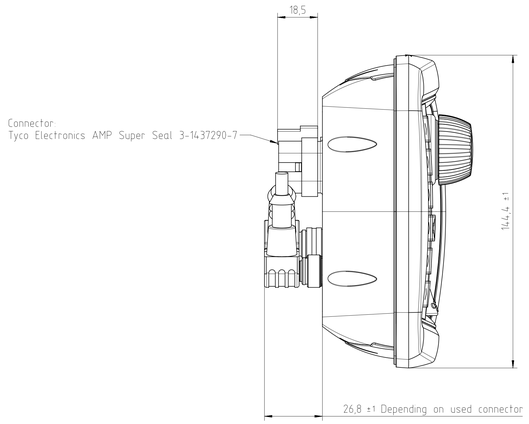

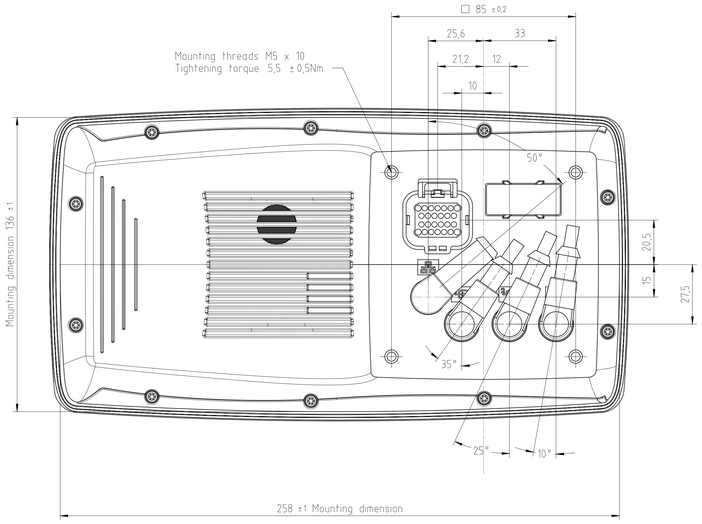

Rev.	Change	Date	Name
-	revised design	11-01-2021	TB

Revision History

General note
- All dimensions after painting / coating / plating
- The complete geometry and missing dimensions have to be taken from the 3D-CAD-file
- All applicable documents (see PPAP-Report) have to be considered

All dimensions in mm		Projection	Surface quality
Allowed deviation DIN 16742-TG5 Size ISO 14405 (E)	Surface DIN EN ISO 1302		Outer edges / Inner edges

Scope of application
For this drawing all rights are reserved
Delivery to third party, copying and otherwise misuse is forbidden
(Protection against Unfair Competition Act)

Scale: 1:1 | (Weight): - kg
Material: -
(Material number): -

	Date	Name
Drawn	22.03.2016	TB
Checked	-	-
Norm	-	-

Part name
OPUS A6 G2 STANDARD FULL

TOPCON
Topcon Electronics GmbH & Co. KG
Industriestr. 7
65366 Geisenheim
Germany
www.topcon-electronics.de

PN Topcon Electronics	Sheet
OPUSA6SN2XXXFXXX	1
PN Topcon	Rev. / Size
-	- / A0

Revisions Topcon			
Rev.	Date	Decription	ECO

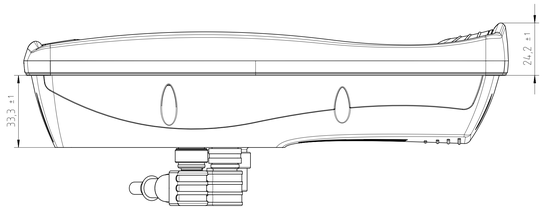





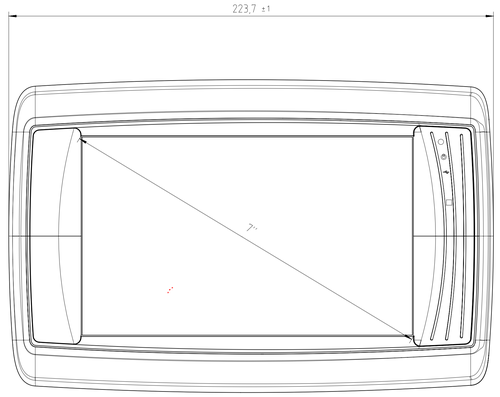

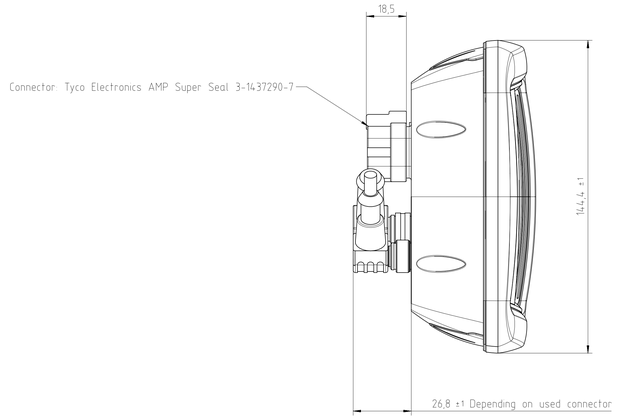

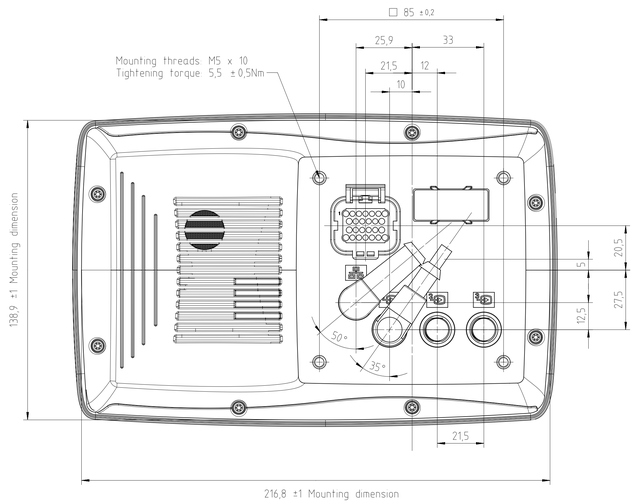

-	revised design	12-01-2021	TB
Rev.	Change	Date	Name

Revision History

General note

- All dimensions after painting / coating / plating
- The complete geometry and missing dimensions have to be taken from the 3D-CAD-file
- All applicable documents (see PPAP-Report) have to be considered

All dimensions in mm	Projection	Surface quality
Allowed deviation DIN 16742-TG1	Surface DIN EN ISO 1302	Outer edges
Size ISO 14405 E		Inner edges

Scope of application	Scale: 1:1	(Weight): - kg
For this drawing all rights are reserved. Delivery to third party, copying and reproduction only with permission. Protection against Unfair Competition Act	Material: - (Material number): -	

	Date	Name
Drawn	05.10.2018	TB
Checked	-	-
Norm	-	-

Part name: OPUS A6 G2 ECO BASIC

TOPCON
Topcon Electronics GmbH & Co. KG
Industriestr. 7
65366 Geisenheim
Germany
www.topcon-electronics.de

PPN Topcon Electronics: OPUSA6EN2XXXBXXX — Sheet 1

PPN Topcon: - — Rev.: - — Size: A0