Industriestraße 24 ▪ 65366 Geisenheim ▪ Germany
www.topcon-electronics.de ▪ dl-opus-info@topcon.com

Technical Data Sheet

OPUS A8 Eco / A8 Standard





1. Notes and Warnings

Attention!
This description is not a substitution for the concerned product's documentation. Please do read the documentation including the manuals carefully before dealing with this product. If the safety instructions in the documentation are not followed dangerous situation can occur that can result in damages, injuries and/or death by high voltage or wrong handling. In case you do not have the correct documentation, you can order it by contacting **opus-support@topcon.com**. Only properly trained personnel with the correct qualification is allowed to handle the device.

Attention!
Do not open the housing to avoid danger to high voltage. Before touching the electric assemblies make sure that the electricity is switched off completely. If the front panel is broken the device needs to be taken out of service due to risk of injury. If perceivable damages on the device exist that can compromise the functionality, it must be taken out of service due to the danger of malfunctions. These particularly include damages to the LCD display, damages to the keyboard, damages that compromise the protection level and damages to the encoder knobs.

Please note:
All content is subject to change without notice. Errors and omissions excepted.

Mounting and Handling
- Do not use the cable as a handle to carry the device.
- Mounting in clean working environment only.
- Do not mount the device under the use of violence because it can cause damage.
- The device must be mounted by trained personnel only into specially designed and tested system.
- The device may not be opened or disassembled.
- The device is to be cleaned with a moist fuzz free cotton cloth. If necessary, a mild cleaning agent may be used. Do not use acid or abrasive cleaning agents.
- The device is to be stored in a cool and dry environment and to be protected against sunshine.
- If the environmental temperature is beneath 10°C the reaction time of the display increases.

2. General Information

	OPUS A8 Eco Basic	OPUS A8 Eco Full	OPUS A8 Standard Basic	OPUS A8 Standard Full
Order Number: CAN=C++/Projektor CDS=Codesys CWV=Codesys WebVisu	OPUSA8EN1CANB000 OPUSA8EN1CDSB000 OPUSA8EN1CWVB000	OPUSA8EN1CANF000 OPUSA8EN1CDSF000	OPUSA8SN1CANB000 OPUSA8SN1CDSB000 OPUSA8SN1CWVB000	OPUSA8SN1CANF000 OPUSA8SN1CDSF000 OPUSA8SN1CWVF000
Dimensions	~330x214x60 mm		~375,3x214x76 mm	
Housing	Front cover: PC/ABS, colored light grey (RAL 7035) with black rubber frame. Back cover: aluminum die cast, colored light grey (RAL 7035)			
Weight	~2.719 g		~2.961 g	
Mounting	landscape or portrait standalone in-dash			

3. Display

	OPUS A8 Eco Basic	OPUS A8 Eco Full	OPUS A8 Standard Basic	OPUS A8 Standard Full
Type:	TFT Color Graphic LCD with LED backlight			
Size:	12.1’ ’, 261 mm (W) x 163 mm (H)			
Resolution:	1280 x 800 px (WXGA), 16:10			
Colors:	16.7 Mio.			
Brightness:	typ. 1.000 cd/m²			
Contrast Ratio:	typ. 750:1			
Optical Bonding:	yes			

4. Input Devices

	OPUS A8 Eco Basic	OPUS A8 Eco Full	OPUS A8 Standard Basic	OPUS A8 Standard Full
Touch	PCT			
Keypad	N/A		Right Keypad: 8 keys with tactile feedback Electromechanical encoder with 16 mechanical detents and push function Lifetime: 1.000.000 actuations	
Indicators and Sensors	Light Sensor 1 Multicolor LED 3 Status LEDs			

5. Electronics

	OPUS A8 Eco Basic	OPUS A8 Eco Full	OPUS A8 Standard Basic	OPUS A8 Standard Full
CPU	NXP I.MX6®quad, 1 GHz			
Mass storage	4 GByte (minus space for OS & application)	8 GByte (minus space for OS & application)	4 GByte (minus space for OS & application)	8 GByte (minus space for OS & application)
RAM	512 MByte	1 GByte	512 MByte	1 GByte
EEPROM	32.768 Byte, 28.672 Byte available for user			
RTC	Buffered by gold cap			
Speaker	80 dB @ 1kHz in 1 m distance			
Operating frequency range	840 Hz to 6 kHz			

Power Supply	System supplied through terminal 30 (battery +, see pinout) and 31 (battery -, see pinout). Terminal 15 (ignition) to be used to switch on/off. Operating voltage range: 9 … 36 V DC. Short circuit protection. Over-voltage protection up to 48 V for max. 2 min. Inverse polarity protection up to -48 V DC for max. 5 min.

Current consumption (without external load), max

Power Mode	Current at 13,5 V DC	Current at 27 V
On	≤ 1600 mA	≤ 700 mA
Low Power	320 – 1600 mA	160 – 700 mA
Sleep	≤ 200 mA	≤ 100 mA
Off	≤ 2 mA	≤ 4 mA

6. Interfaces

	OPUS A8 Eco Basic	OPUS A8 Eco Full	OPUS A8 Standard Basic	OPUS A8 Standard Full
CAN Bus	2 x CAN-Interface according to ISO 11898, CAN-specification 2.0 B active, up to 1 Mbit/s (default 250 Kbit/s, 500 Kbit/s, 750 Kbit/s, 1 Mbit/s)			
RS232	1 x RS232-Interface Type: EIA232 (only RxD, TxD, GND) Speed: max. 115 Kbps			
USB	Main connector: 1x USB 2.0 High Speed		Main connector: 1x USB 2.0 High Speed Front connector: 1x USB 2.0 High Speed	
Video-Interface	Inputs: 1 x analog V_{ss} 1 V Camera supply: 12 VDC Max. current: 500 mA	Inputs: 3 x analog V_{ss} 1 V Camera supply: 12 VDC Max. current: 500 mA	Inputs: 1 x analog V_{ss} 1 V Camera supply: 12 VDC Max. current: 500 mA	Inputs: 3 x analog V_{ss} 1 V Camera supply: 12 VDC Max. current: 500 mA
Ethernet Interface	1 x 10/100 Mbit/s Base T			

Inputs	2 configurable analog/digital inputs **Input impedance**: > 3 k **OhmResolution**: 12 bit (1028 digits, 1 digit ~3 mV) **Input range**: 0 … 12 V or 4-20 mA or 0-20 mA **Max. protectable input voltage:** 36 VDC **Protection:** Short circuit protection **Frequency**: Max. signal frequency 50 Hz Input 1 max. signal frequency 10 kHz	4 configurable analog/digital inputs **Input impedance**: > 3 k **OhmResolution**: 12 bit (1028 digits, 1 digit ~3 mV) **Input range**: 0 … 12 V or 4-20 mA or 0-20 mA **Max. protectable input voltage:** 36 VDC **Protection:** Short circuit protection **Frequency**: Max. signal frequency 50 Hz Input 1 max. signal frequency 10 kHz	2 configurable analog/digital inputs **Input impedance**: > 3 k **OhmResolution**: 12 bit (1028 digits, 1 digit ~3 mV) **Input range**: 0 … 12 V or 4-20 mA or 0-20 mA **Max. protectable input voltage:** 36 VDC **Protection:** Short circuit protection **Frequency**: Max. signal frequency 50 Hz Input 1 max. signal frequency 10 kHz	4 configurable analog/digital inputs **Input impedance**: > 3 k **OhmResolution**: 12 bit (1028 digits, 1 digit ~3 mV) **Input range**: 0 … 12 V or 4-20 mA or 0-20 mA **Max. protectable input voltage:** 36 VDC **Protection:** Short circuit protection **Frequency**: Max. signal frequency 50 Hz Input 1 max. signal frequency 10 kHz
Outputs	1 digital outputs **Short circuit protection**: Up to 36 V I_{max} 300 mA open drain $R_{DS,on}$ < 1 Ohm $R_{DS,off}$ > 100 kOhm	3 digital outputs **Short circuit protection**: Up to 36 V I_{max} 300 mA open drain $R_{DS,on}$ < 1 Ohm $R_{DS,off}$ > 100 kOhm	1 digital outputs **Short circuit protection**: Up to 36 V I_{max} 300 mA open drain $R_{DS,on}$ < 1 Ohm $R_{DS,off}$ > 100 kOhm	3 digital outputs **Short circuit protection**: Up to 36 V I_{max} 300 mA open drain $R_{DS,on}$ < 1 Ohm $R_{DS,off}$ > 100 kOhm
Audio	N/A	1 Audio output (left, right, GND) Output power approx.65 mW @ 32 Ohm	N/A	1 Audio output (left, right, GND) Output power approx.65 mW @ 32 Ohm

7. Connectors

	OPUS A8 Eco Basic	OPUS A8 Eco Full	OPUS A8 Standard Basic	OPUS A8 Standard Full
Main	Tyco-AMP 1437288-6 Mating connector (customer) Tyco-AMP 3-1437290-7 Mating crimp contact (customer) Tyco-AMP 3-1447221-4 Dummy Plug (customer) Tyco AMP 4-1437284-3			
Video	M12 round connector, female, 5- pole, B-coded, acc. To EN 61076-2-101 Recommended mating connector type according to IEC 61076-2-10: MM 005-Gx1-B x) A, C, I, P, R or S-type			
Ethernet	M12 round connector, female, 4-pole, D-coded, acc. To EN 61076-2-101 Recommended mating connector type according to IEC 61076-2-10: MM 004-Gx1-D x) A, C, I, P, R or S-type			

8. Software

	OPUS A8 Eco Basic	OPUS A8 Eco Full	OPUS A8 Standard Basic	OPUS A8 Standard Full
Operating System	Linux Kernel 6.0.0 or higher			
Application Programming	OPUS Projektor Tool CODESYS C/C++			

9. Testing and Verification

CE-Compliance

EU Directive 2014/30/EU (EMC) according to:

- EN ISO 13766-1: Earth-moving and building construction machinery – Electromagnetic compatibility (EMC) of machines with internal electrical power supply
- EN ISO 14982: Agricultural and forestry machinery - Electromagnetic compatibility - Test methods and acceptance criteria

E1 – Type approval

EU Directive ECE R 10

FCC

This device complies with part 15 of the FCC Rules. Operation is subject to the following two conditions: (1) This device may not cause harmful interference, and (2) this device must accept any interference received, including interference that may cause undesired operation.

Protection Level (IP Code)

IP 65 and IP 66 according to ISO 20653: Road Vehicles – Degrees of protection (IP-Code) – Protection of electrical equipment against foreign objects, water and access

Electrical

12 and 24V-Systems according to

- ISO 16750-2: Road Vehicles – Environmental conditions and testing for electrical and electronic equipment – Electrical Loads
- ISO 15003: Agricultural Engineering – Electrical and electronic equipment – Testing resistance to environmental conditions

Mechanical

- ISO 16750-3: Road Vehicles – Environmental condition and testing for electrical and electronic equipment – Mechanical loads., Code L
- ISO 15003: Agricultural Engineering – Electrical and electronic equipment – Testing resistance to environmental conditions
  - Mechanical Shock: Level 2
  - Random Vibration: Level 2
  - Sinusoidal Vibration: Level 2

Climate

- ISO 16750-4: Road Vehicles – Environmental conditions and testing for electrical and electronic equipment – Climatic Loads
  - Operating Temperature Range: -30 … +65°C
  - Storage Temperature Range: -40 … +85°C
- ISO 15003: Agricultural Engineering – Electrical and electronic equipment – Testing resistance to environmental conditions

10. Pinout

Main connector pinout

	OPUS A8 Basic			OPUS A8 Full	
Pin No.	**Assignment**	**Description**		**Assignment**	**Description**
1	VCC	supply voltage +; terminal 30		VCC	supply voltage +; terminal 30
2	Ignition Input	ignition input; terminal 15		Ignition Input	ignition input; terminal 15
3	GND	supply voltage -; terminal 31		GND	supply voltage -; terminal 31
4	CarGND	grounding		CarGND	grounding
5	n.c.	not connected		AUDIO_L	audio output, left channel
6	n.c.	not connected		AUDIO_R	audio output, right channel
7	n.c.	not connected		AUDIO_GND	audio ground
8	CAN1H	CAN 1 high		CAN1H	CAN 1 high
9	CAN1L	CAN 1 low		CAN1L	CAN 1 low
10	CAN2H	CAN 2 high		CAN2H	CAN 2 high
11	CAN2L	CAN 2 low		CAN2L	CAN 2 low
12	USB_VCC	USB +5V supply		USB_VCC	USB +5V supply
13	USB_GND	USB supply GND		USB_GND	USB supply GND
14	USB_D-	USB data -		USB_D-	USB data -
15	USB_D+	USB data +		USB_D+	USB data +
16	RS232 RxD	RS232 receive data		RS232 RxD	RS232 receive data
17	RS232 TxD	RS232 transmit data		RS232 TxD	RS232 transmit data
18	RS232 GND	RS232 GND		RS232 GND	RS232 GND
19	n.c.	not connected		A/DI3	analog/digital input 3
20	A/DI1	analog/digital input 1, full freq		A/DI1	analog/digital input 1, full freq
21	A/DI2	analog/digital input 2		A/DI2	analog/digital input 2
22	n.c.	not connected		A/DI4	analog/digital input 4
23	SERV_EN	service enable		SERV_EN	service enable
24	n.c.	not connected		DO3	digital output 3
25	DO1	digital output 1		DO1	digital output 1
26	n.c.	not connected		DO2	digital output 2

View on the rear side of the A8

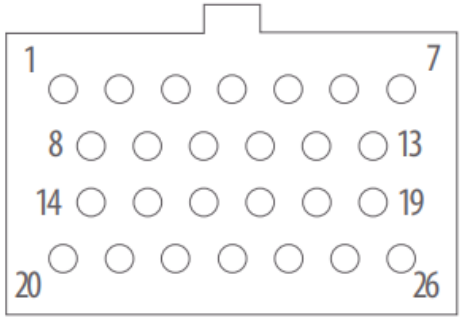

OPUS displays in the industrial sector are only intended to be used with cable length less than 30 meters.

Video connector

Pin No.	Assignment
1	VidSig +
2	Camera control output
3	Camera supply +12VDC
4	Camera supply GND
5	VidSig GND

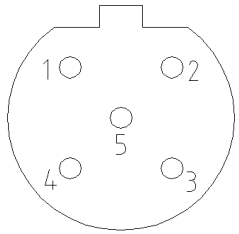

Video Connector, M12, female, 5 pins, b-coded

Ethernet connector

Pin No.	Assignment
1	TD+
2	RD+
3	TD-
4	RD-

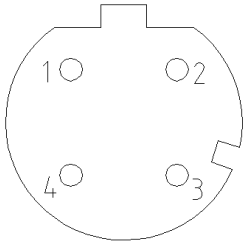

Ethernet Connector, M12, female, 4 pins, d-coded

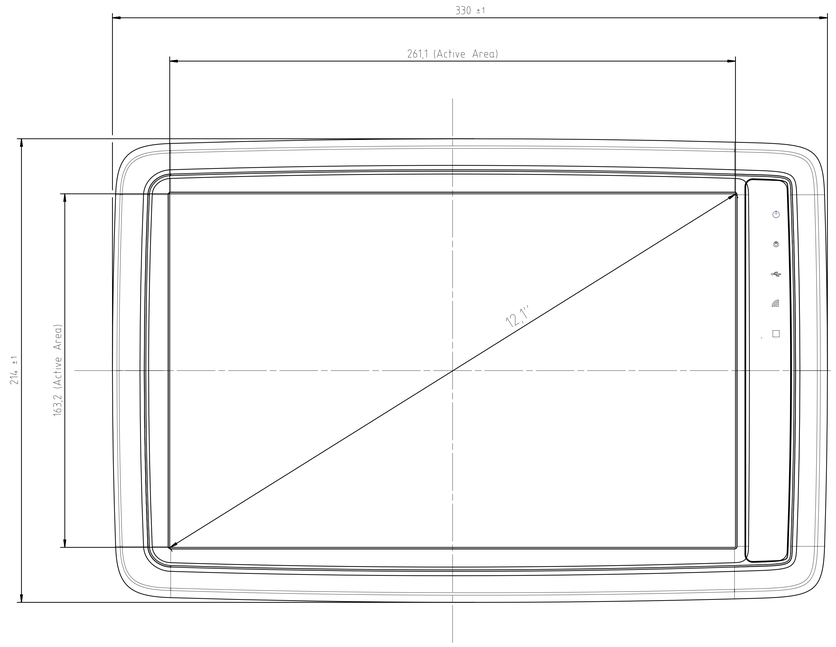

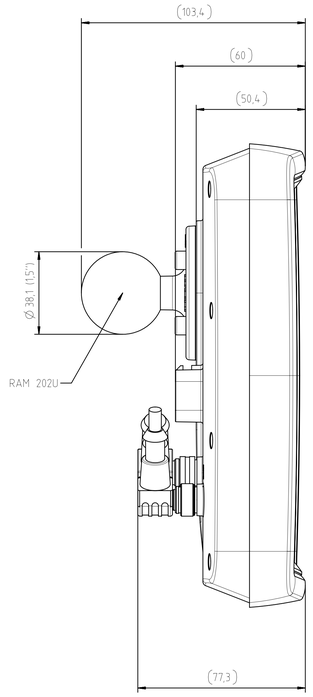

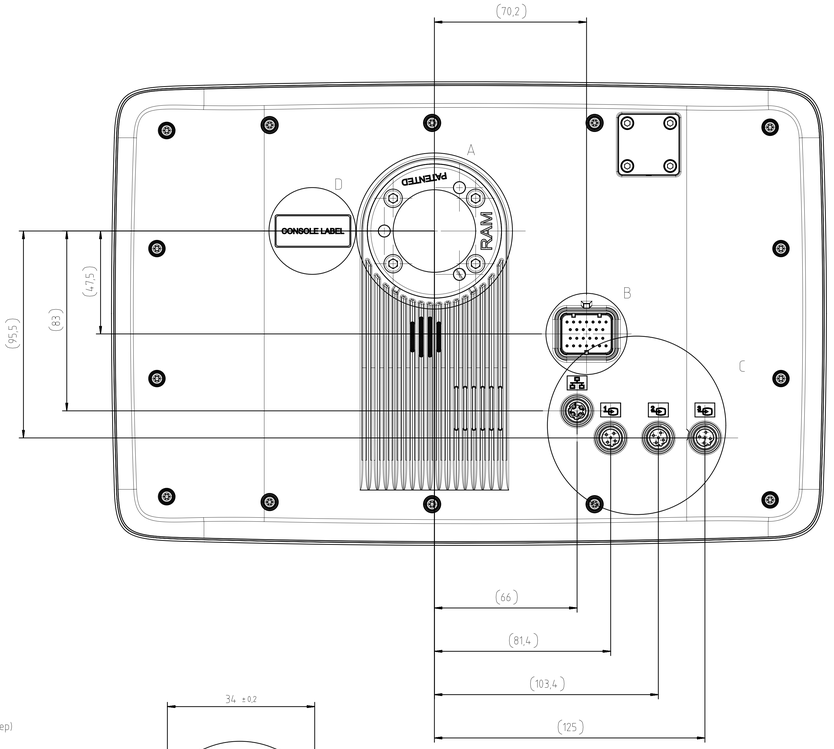

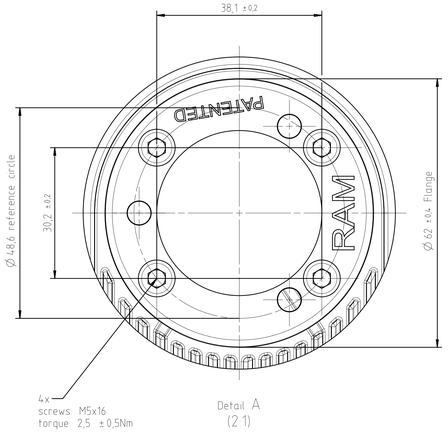

Detail A
(2:1)

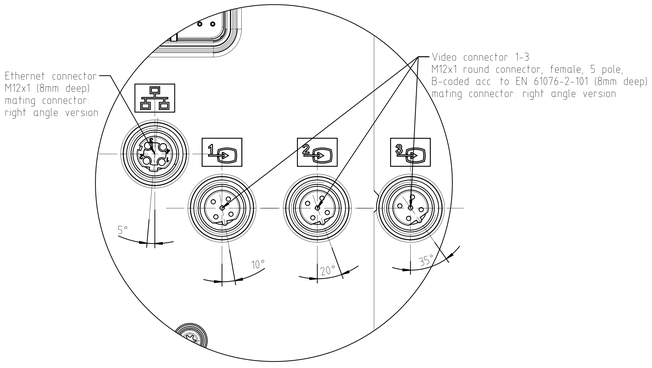

Detail C
(2:1)

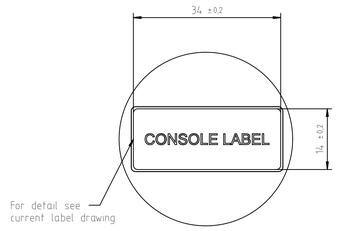

DETAIL D
(SCALE 2:1)

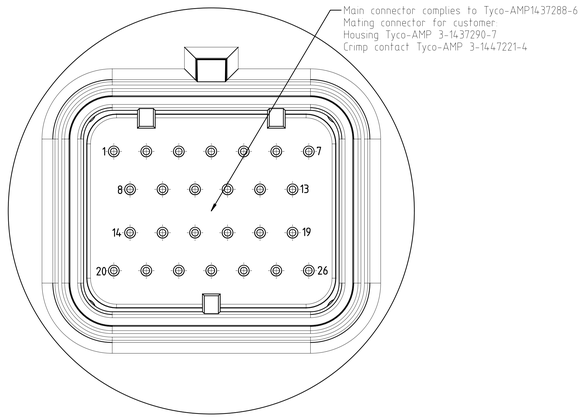

Detail B
(5:1)

Pinout Main connector

Pin	Assignment	Description
1	VCC	supply voltage +, terminal 30
2	Ignition Input	ignition input, terminal 15
3	GND	supply voltage -, terminal 31
4	CarGND	Car GND
5	AUDIO_L	Audio Out L
6	AUDIO_R	Audio Out R
7	AUDIO_GND	Audio Out GND
8	CAN1H	CAN 1 high
9	CAN1L	CAN 1 low
10	CAN2H	CAN 2 high
11	CAN2L	CAN 2 low
12	USB_VCC	USB +5V supply
13	USB_GND	USB supply GND
14	USB_D-	USB Data -
15	USB_D+	USB Data +
16	RS232 RxD	RS232 receive data
17	RS232 TxD	RS232 transmit data
18	RS232 GND	RS232 GND
19	A/DI3	analog/digital input 3
20	A/DI1	analog/digital input 1, full frequency
21	A/DI2	analog/digital input 2
22	A/DI4	analog/digital input 4
23	SERV_EN	service enable, for service use only
24	DO3	digital output 3
25	DO1	digital output 1
26	DO2	digital output 2

Variants OPUS A8 ECO

Version	Articelcode	Rev
OPUSA8 ECO Basic	OPUSA8EN1CANB000	CA
OPUS A8 ECO Basic CODESYS©	OPUSA8EN1CDSB000	CA
OPUSA8 ECO Full	OPUSA8EN1CANF000	CA
OPUS A8 ECO Full CODESYS©	OPUSA8EN1CDSF000	CA
OPUSA8 ECO Basic ARGO	OPUSA8EN1CANBC52	CA
OPUS A8 ECO Full Universal Terminal Small	OPUSA8EN1UTSF000	CA
OPUS A8 ECO Full Universal Terminal Medium	OPUSA8EN1UTMF000	CA
OPUS A8 ECO Full Universal Terminal Large	OPUSA8EN1UTLF000	CA
OPUS A8 ECO Basic CODESYS© WebVisu	OPUSA8EN1CWVB000	CA
OPUS A8 ECO Full CODESYS© WebVisu	OPUSA8EN1CWVF000	CA

Pinout Video connector:

Pin	Description
1	Videosignal +
2	Switch output
3	Camera +
4	Camera -
5	VidSig GND

Pinout Ethernet connector:

Pin	Description
1	TD +
2	RD +
3	TD -
4	RD -

Rev.	Change	Date	Name
Revision History			

General note
- All dimensions after painting / coating / plating
- The complete geometry and missing dimensions have to be taken from the 3D-CAD-file
- All applicable documents (see PPAP-Report) have to be considered

All dimensions in mm | Projection | Surface quality

Allowed deviation ISO 2768-mK | Surface DIN EN ISO 1302 | Outer edges | Inner edges

Size ISO 14495 ©

Scope of application
For this drawing all rights are reserved. Delivery to third party, copying and offering of this drawing as well. Protection against Unfair Competition Act.

Scale: 1:2 | (Weight): - kg

Material: -
(Material number): -

	Date	Name
Drawn	10.05.2021	AL
Checked	10.05.2021	TB
Norm	-	-

Part name
OPUS A8 ECO

TOPCON
Topcon Electronics GmbH & Co. KG
Industriepark 1
85386 Gesenkeim
Germany
www.topcon-electronics.de

PN Topcon Electronics: OPUSA8ENTXXXXXXX_XX | Sheet 1

PN Topcon: - | Rev. AA | Size A0

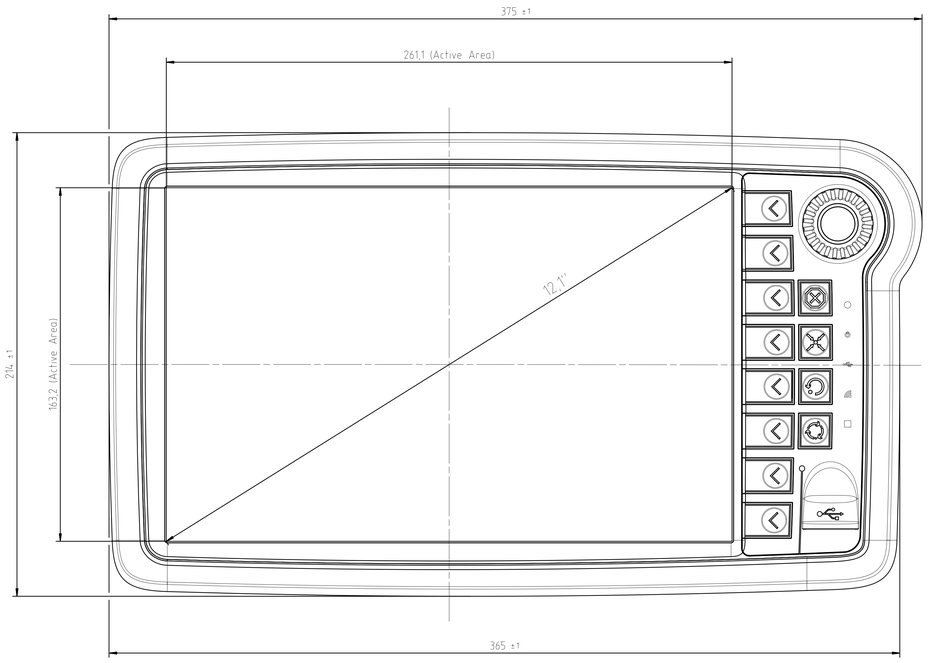

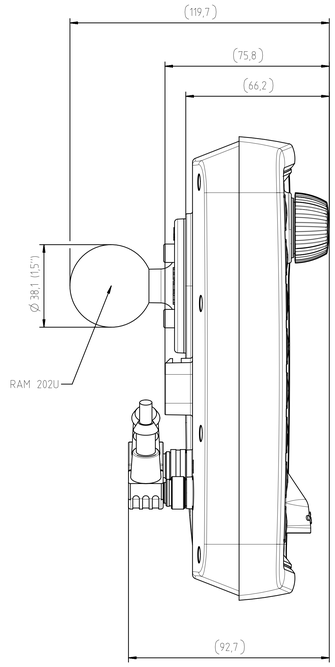

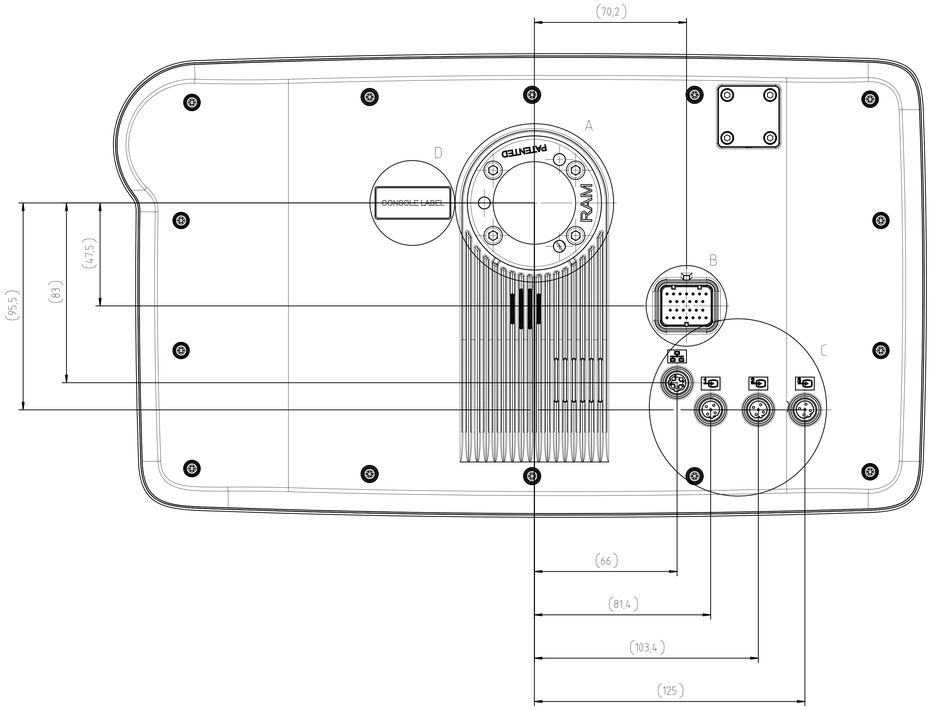

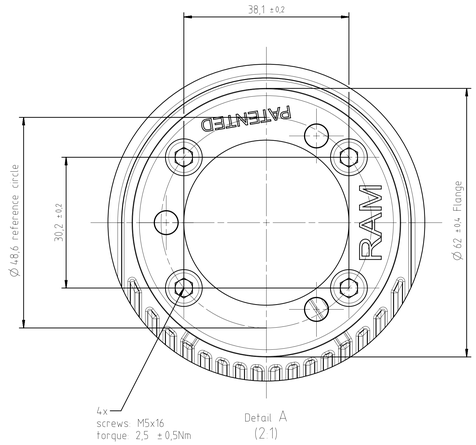

Detail A
(2:1)

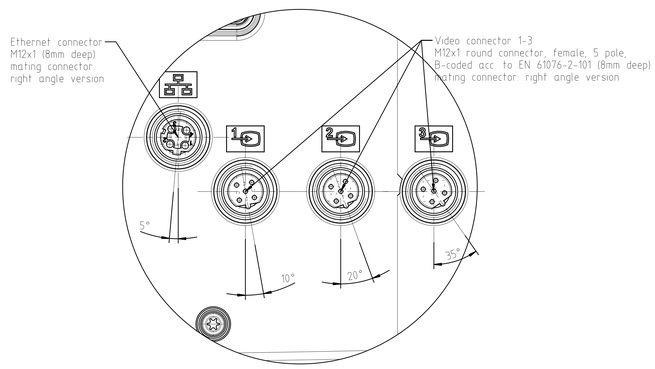

Detail C
(2:1)

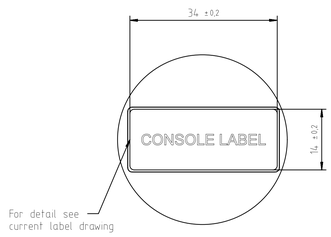

DETAIL D
(SCALE 2:1)

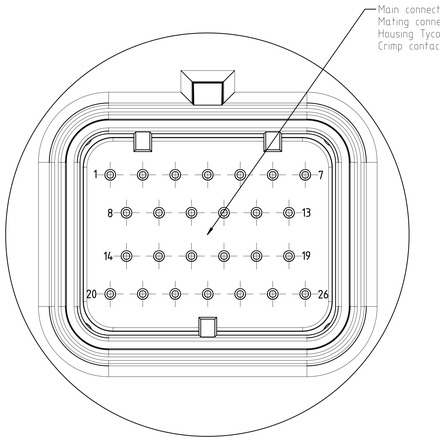

Detail B
(5:1)

Pinout Main Connector

Pin	Assignment	Description
1	VCC	supply voltage +, terminal 30
2	Ignition Input	ignition input, terminal 15
3	GND	supply voltage -, terminal 31
4	CarGND	Car GND
5	AUDIO_L	Audio Out L
6	AUDIO_R	Audio Out R
7	AUDIO_GND	Audio Out GND
8	CAN1H	CAN 1 high
9	CAN1L	CAN 1 low
10	CAN2H	CAN 2 high
11	CAN2L	CAN 2 low
12	USB_VCC	USB +5V supply
13	USB_GND	USB supply GND
14	USB_D-	USB Data -
15	USB_D+	USB Data +
16	RS232 RxD	RS232 receive data
17	RS232 TxD	RS232 transmit data
18	RS232 GND	RS232 GND
19	A/DI3	analog/digital input 3
20	A/DI1	analog/digital input 1, full frequency
21	A/DI2	analog/digital input 2
22	A/DI4	analog/digital input 4
23	SERV_EN	service enable, for service use only
24	DO3	digital output 3
25	DO1	digital output 1
26	DO2	digital output 2

Variants OPUS A8 Satndard

Version	Articelcode	Rev.
OPUS A8 STANDARD Basic	OPUSA8SN1CANB000	BA
OPUS A8 STANDARD Basic CODESYS©	OPUSA8SN1CDSB000	CA
OPUS A8 STANDARD Full	OPUSA8SN1CANF000	CA
OPUS A8 STANDARD Full CODESYS©	OPUSA8SN1CDSF000	CA
OPUS A8 STANDARD WIKA Full	OPUSA8SN1CDSFK15	CA
OPUS A8 STANDARD Full Universal Terminal Small	OPUSA8SN1UTSF000	CA
OPUS A8 STANDARD Full Universal Terminal Medium	OPUSA8SN1UTMF000	CA
OPUS A8 STANDARD Full Universal Terminal Large	OPUSA8SN1UTLF000	CA
OPUS A8 STANDARD Basic CODESYS© WebVisu	OPUSA8SN1CWVB000	CA
OPUS A8 STANDARD Full CODESYS© WebVisu	OPUSA8SN1CWVF000	CA

Pinout Video connector:

Pin	Description
1	Videosignal +
2	Switch output
3	Camera +
4	Camera -
5	VidSig GND

Pinout Ethernet connector:

Pin	Description
1	TD +
2	RD +
3	TD -
4	RD -

Rev.	Change	Date	Name
Revision History			

General note
- All dimensions after painting / coating / plating
- The complete geometry and missing dimensions have to be taken from the 3D-CAD-file
- All applicable documents (see PPAP-Report) have to be considered

All dimensions in mm | Projection | Surface quality

Allowed deviation ISO 2768-mK | Surface DIN EN ISO 1302 | Outer edges | Inner edges

Size ISO 14405 (E)

Scope of application

For this drawing all rights are reserved. Delivery to third parties, copying and otherwise misuse is forbidden. (Protection against Unfair Competition Act)

Scale: 1:2 | (Weight): - kg

Material: -
(Material number): -

	Date	Name
Drawn	11.05.2021	AL
Checked	11.05.2021	TB
Norm	-	-

Part name
OPUS A8 STANDARD

TOPCON
Topcon Electronics GmbH & Co. KG
Industriestr. 1
82110 Germering
Germany
www.topcon-electronics.de

PN Topcon Electronics
OPUSA8SN1XXXXXXX_XX

Sheet 1

PN Topcon - | Rev. - | Size A0