Industriestraße 24 ▪ 65366 Geisenheim ▪ Germany
www.topcon-electronics.de ▪ dl-opus-info@topcon.com

Technical Data Sheet

OPUS B2 Eco / B2 Standard



1. Notes and Warnings

Attention!
This description is not a substitution for the concerned product's documentation. Please do read the documentation including the manuals carefully before dealing with this product. If the safety instructions in the documentation are not followed dangerous situation can occur that can result in damages, injuries and/or death by high voltage or wrong handling. In case you do not have the correct documentation, you can order it by contacting opus-support@topcon.com. Only properly trained personnel with the correct qualification is allowed to handle the device.

Attention!
Do not open the housing to avoid danger to high voltage. Before touching the electric assemblies make sure that the electricity is switched off completely. If the front panel is broken the device needs to be taken out of service due to risk of injury. If perceivable damages on the device exist that can compromise the functionality, it must be taken out of service due to the danger of malfunctions. These particularly include damages to the LCD display, damages to the keyboard, damages that compromise the protection level and damages to the encoder knobs.

Please note:
All content is subject to change without notice.
Errors and omissions excepted.

Mounting and Handling
- Do not use the cable as a handle to carry the device.
- Mounting in clean working environment only.
- Do not mount the device under the use of violence because it can cause damage.
- The device must be mounted by trained personnel only into especially designed and tested system.
- The device may not be opened or disassembled.
- The device is to be cleaned with a moist fuzz free cotton cloth. If necessary, a mild cleaning agent may be used. Do not use acid or abrasive cleaning agents.
- The device is to be stored in a cool and dry environment and to be protected against sunshine.
- If the environmental temperature is beneath 10°C the reaction time of the display increases.
- Picture sticking is possible at higher temperatures if no screensaver is used

2. General Information

	OPUS B2 Eco Basic	OPUS B2 Eco Full	OPUS B2 Standard Basic	OPUS B2 Standard Full
Order Number: CAN=C++/Projektor CDS=Codesys ISO=ISO-VT	OPUSB2EN1CANB000 OPUSB2EN1CDSB000	OPUSB2EN1CANF000 OPUSB2EN1CDSF000 OPUSB2EN1ISOF000	OPUSB2SN1CANB000 OPUSB2SN1CDSB000	OPUSB2SN1CANF000 OPUSB2SN1CDSF000 OPUSB2SN1ISOF000
Dimensions	~123x89x35 mm		~144x89x35 mm	
Weight	~ 240g		~ 260g	
Housing	Glas, PC/ABS			
Mounting	landscape or portrait standalone in-dash			

3. Display

	OPUS B2 Eco Basic	OPUS B2 Eco Full	OPUS B2 Standard Basic	OPUS B2 Standard Full
Type:	TFT Color Graphic LCD with LED backlight			
Size:	4,3”, ~95x55 mm			
Resolution:	480x272 px, 15:9			
Colors:	16.7 Mio.			
Brightness:	typ. 850 cd/m²	typ. 800 cd/m²	typ. 850 cd/m²	typ. 800 cd/m²
Contrast Ratio:	typ. 800:1			
Optical Bonding:	yes			

4. Input Devices

	OPUS B2 Eco Basic	OPUS B2 Eco Full	OPUS B2 Standard Basic	OPUS B2 Standard Full
Touch	N/A	PCT	N/A	PCT
Indicators and Sensors	N/A		4 keys with fluorescent print w/o Backlight	

5. Electronics

	OPUS B2 Eco Basic	OPUS B2 Eco Full	OPUS B2 Standard Basic	OPUS B2 Standard Full
CPU	Freescale NXP i.MX 6 ULL 32-bit MPU, ARM Cortex-A7 core, 528MHz			
Mass storage	2 GB (4GB eMMC in pSLC-Mode)			
RAM	256 MB, DDR3L, 1600Mbps			
EEPROM	8.192 Byte, 7.424 Byte available for user			
RTC	System clock at runtime, no RTC chip, no buffer			
Buzzer	N/A	Typical 90 dB(A) @ 10cm @3050 Hz / 80 dB(A) @ 30cm @3050 Hz	N/A	Typical 90 dB(A) @ 10cm @3050 Hz / 80 dB(A) @ 30cm @3050 Hz
Power Supply	System supplied through terminal 30 (battery +, see pinout) and 31 (battery -, see pinout). Terminal 15 (ignition) to be used to switch on/off. Operating voltage range: 9 … 36 V DC. Short circuit protection. Over-voltage protection up to 48 V, required to power up the device for max. 5 min. Inverse polarity protection up to -48 V DC for max. 5 min.			

Current consumption (without external load), max

Power Mode	Current at 13,5 V	Current at 27 V DC
On	140 mA	110 mA
Low Power	60-140 mA	60-110 mA
Sleep	30 mA	50 mA
Off	≤ 2 mA	≤ 2 mA

6. Interfaces

	OPUS B2 Eco Basic	OPUS B2 Eco Full	OPUS B2 Standard Basic	OPUS B2 Standard Full
CAN Bus	2 x CAN-Interface according to ISO 11898, CAN-specification 2.0 B active, up to 1 Mbit/s (default 250 Kbit/s, 500 Kbit/s, 750 Kbit/s, 1 Mbit/s) All interfaces are CAN-FD tolerant			
RS232	Only with Service-Adapter			
USB	Back connector: USB 2.0, Type C, high speed, 1A, short protected against Vbus, thermal protected, ault flag			
Video-Interface	N/A			
Ethernet Interface	N/A			
Inputs	N/A			
Outputs	N/A			
Audio	N/A			

7. Connectors

	OPUS B2 Eco Basic	OPUS B2 Eco Full	OPUS B2 Standard Basic	OPUS B2 Standard Full
Main	Deutsch DT06-08SA			

8. Software

	OPUS B2 Eco Basic	OPUS B2 Eco Full	OPUS B2 Standard Basic	OPUS B2 Standard Full
Operating System	Linux Kernel 6.0.0 or higher			
Application Programming	OPUS Projektor Tool CODESYS C/C++ ISO-VT (OPUS-Projektor)			

9. Testing and Verification

CE-Compliance

EU Directive 2014/30/EU (EMC) according to:

- EN 13309: Construction machinery – Electromagnetic compatibility of machines with internal electrical power supply
- EN ISO 14982: Agricultural and forestry machinery - Electromagnetic compatibility - Test methods and acceptance criteria
- EN 50498: Electromagnetic compatibility (EMC). Product family standard for aftermarket electronic equipment in vehicles
- EN 12895: Industrial Trucks – Electromagnetic compatibility
- EN 61000-6-2: Electromagnetic compatibility (EMC) - Generic standards - Immunity for industrial environments
- EN 61000-6-4: Electromagnetic compatibility (EMC). Generic standards. Emission standard for industrial environments

EMC Emission radiated

30-75 MHz	62-52[1] dB(µV/m) – QP – 120kHz
	52-42[1] dB(µV/m) – AV – 120kHz
75-400 MHz	52-63[2] dB(µV/m) – QP – 120kHz
	42-53[2] dB(µV/m) – AV – 120kHz
400-1000 MHz	63 dB(µV/m) – QP – 120kHz
	53 dB(µV/m) – AV – 120kHz
1000-2500 MHz	73 dB(µV/m) – P – 120kHz
	53 dB(µV/m) – AV – 120kHz
2500-6000 MHz	80 dB(µV/m) – P – 1000kHz
	60 dB(µV/m) – AV – 1000kHz

QP: Quasi-Peak

AV: Average

P: Peak

1: Value decreases linearly with the logarithm of the frequency.

2: Value increases linearly with the logarithm of the frequency.

EMC Immunity radiated

20MHz to 800MHz with amplitude modulation 800MHz to 6GHz with pulse modulation

30V/m for the radiated field (absorber lined chamber) testing method (ISO 11452-2) in vertical and horizontal polarization **OR/AND**

60mA for the Bulk Current Injection (BCI) testing method (ISO 11452-4)

EMC Emission conducted

	12V-System (Maximum values)	**24V-System** (Maximum values)
	Positive slow pulses: +37V	Positive slow pulses: +37V
	Negative slow pulses: -75V	Negative slow pulses: -150V
	Positive fast pulses: +75V	Positive fast pulses: +150V
	Negative fast pulses: -112V	Negative fast pulses: -150V

	12 V-System	**24 V- System**
Test Pulse 1	Us = 112 V; FS: C	Us=-450V; FS: C
Test Pulse 2a	Us=+55V; FS: B	Us=+55V; FS: B
Test Pulse 2b	Us=+10V; FS: C	Us=+20V; FS: C
Test Pulse 3a	Us=-165V; FS: A	Us=-220V; FS: A
Test Pulse 3b	Us=+112V; FS: A	Us=+220V; FS: A
Test Pulse 4	Us6=6V; Us=6.5 V FS: B	Us6=6V; Us=10V FS: B
(Starting profile)		
Load Dump	Us=+35V; FS: C	Us=+58V; FS: C

FS: Function Status

Electrostatic Discharge

+/- 4kV contact discharge; FS: A

+/- 8kV contact discharge; FS: C

+/- 4kV air discharge; FS: A

+/- 8kV air discharge; FS: B

+/- 15kV air discharge; FS: C

E1 – Type approval

EU Directive ECE R 10

Protection Level (IP Code)

IP66 and IP67 according to ISO 20653: Road Vehicles – Degrees of protection (IP-Code) – Protection of electrical equipment against foreign objects, water and access

FCC

„This device complies with part 15 of the FCC Rules. Operation is subject to the following two conditions: (1) This device may not cause harmful interference, and (2) this device must accept any interference received, including interference that may cause undesired operation.“

Electrical

12 and 24V-Systems according to:

Inverse Polarity resistance

5min @ -48V (no defect)

Over voltage resistance

5min @ +48V (no defect)

Start behavior

Start over Temperature

Start at TRoom; decrease in 5°steps to TMin; go to TRoom; increase in 5°steps to THigh; Start DUT at each T; Successful start expected

Superimposed alternating voltage

Triangle signal, frequency sweep: 50Hz-25kHz-50Hz inside 60s; FS: A

Level	12V	24V
AC peak-to-peak UPP1	1VAC	4VAC
AC peak-to-peak UPP2	2VAC	4VAC
AC peak-to-peak UPP3	4VAC	10VAC

De-/Increase Supply Voltage

Sweep Voltage UMin-0V-UMin with 0.5V/min; FS: D

Drop in Supply Voltage

12V System	24V System
U1=10V; U2=18V; t=5min; FS: A	U1=20V; U2=38V; t=5min; FS: A

Mechanical

Vibration, noise

Frequency [Hz]	PSD [(m/s2)/Hz]
10	18
20	36
30	36
138	1.69
200	2
300	1
2000	1

32h per Axis; FS: A

Vibration, sinusoidal

Resonance sweep

Frequency	Displacement	Acceleration
10 Hz	-	5g
2000 Hz	-	5g

Endurance Test:

Frequency	Displacement	Acceleration
10 Hz	-	5g
2000 Hz	-	5g

Mechanical shock

Part 1: 300m/s², 18ms, 3 times per axis/direction; FS: A

Part 2: 500m/s², 6ms, 10 times per axis/direction; FS: A

Part 3: 400m/s², 6ms, 4000 times per axis/direction; FS: A

Drop Test

Drop the DUT on each side and each edge from a high of 1m on a concrete floor. No damage or visible damage.

Package Drop

Test Drop the DUT inside the package on each side and each edge from a high of 1m on a concrete floor. No damage of the DUT

No cracks to the package

Climate

Salt spray resistance

Part 1: 7 cycles at 24h (8h spraying; 16h rest) salt concentration: 5%

Part 2: 4 cycles at 168h; 4 cycle:

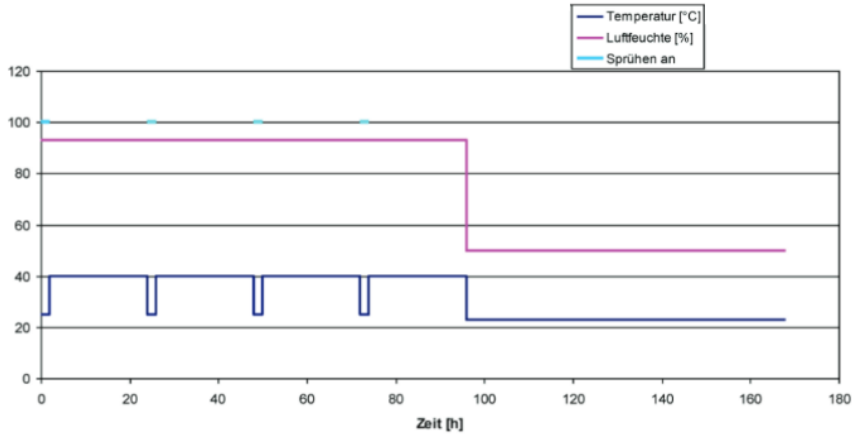

Chemical resistance

Apply once a day, for three days, the following chemicals with a brush over the exposed surface. Inspect without rinsing immediately afterwards and after 100h. Alcohol, Antifreeze liquid (Ethyl-glycol), Diesel oil, Domestic Ammonia, Gasoline, Hydraulic oil 10W40, Liquid lime, Motor oil, NPK Chemical fertilizers 20 10 20, Windscreen cleaning mixture, Ammonium Nitrate and Ammonium Phosphate fertilizers, Bovine Effluent - (up to 5% propionic acid), Diesel fuel, STOU (Super Tractor Universal Oil) lubricating oil

Damp heat steady

10days @+40°C and 93%r.H.; FS: C

Damp heat cyclic

6 cycles (each 24h); TLow=+25°C; THigh=+55°C Humidity: >= 90%r.H.; FS: A

Operating temperature	Storage temperature
24h @ -30°C; FS: A	24h @ -40°C; FS: C
96h @ +75°C; FS: A	48h @ +85°C; FS: C

Temperature cycling

30 cycles (each 8h); TLow=-30°C; THigh=+75°C; FS: A

Temperature shock

100 cycles (each 2h); TLow=-40°C; THigh=+85°C; Tchange: <30s; FS: C

UV resistance

Over-all time: 1500h

Cycle: 8h UV at +60°C, 4h 95%r.H.

No material damage, No visible change

10. Pinout

Pin No.	Assignment	Description
1	SERV_EN	Service Enable
2	KL15	ignition input; terminal 15
3	KL31	supply voltage -; terminal 31
4	KL30	supply voltage +; terminal 30
5	CAN 2 L	CAN 2 low
6	CAN 2 H	CAN 2 high
7	CAN 1 L	CAN 1 low
8	CAN 1 H	CAN 1 high

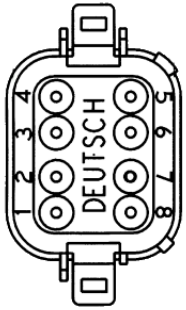

Revisions Topcon			
Rev.	Date	Description	ECO

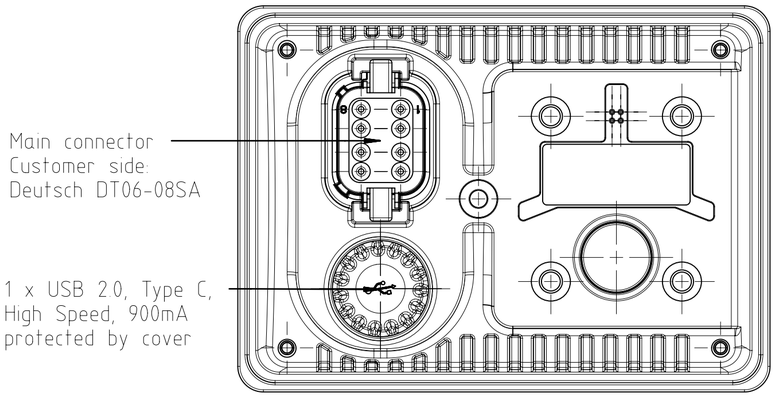

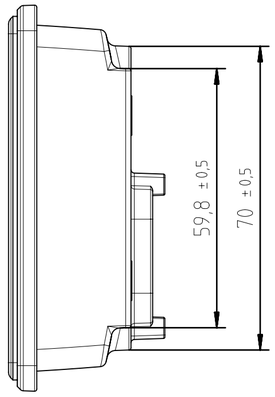

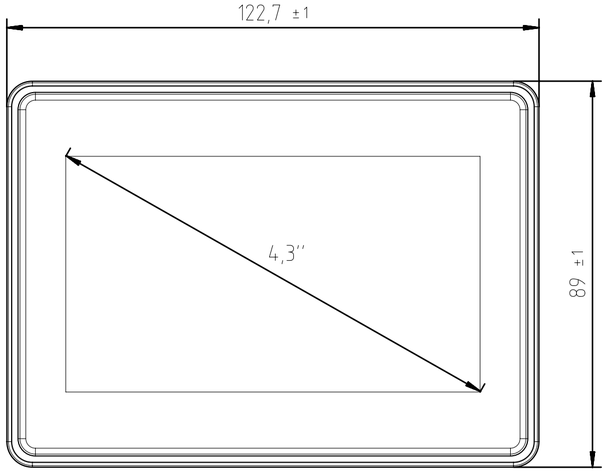

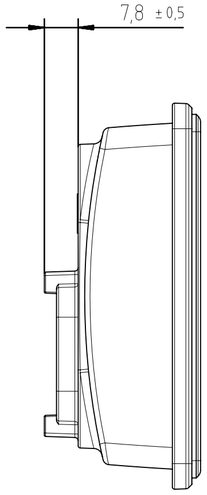

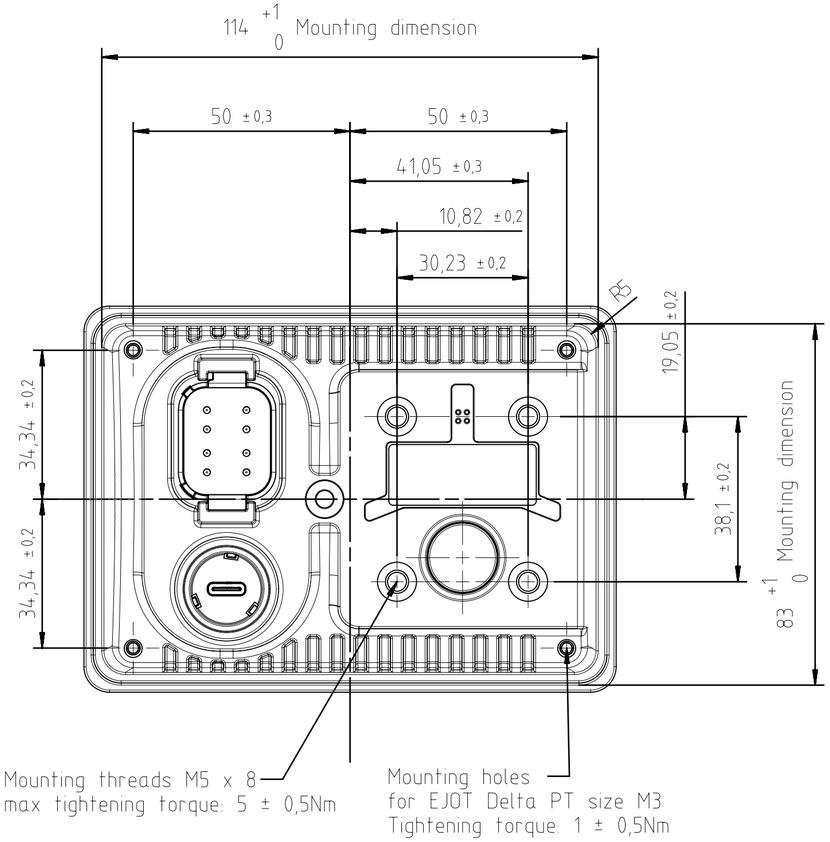

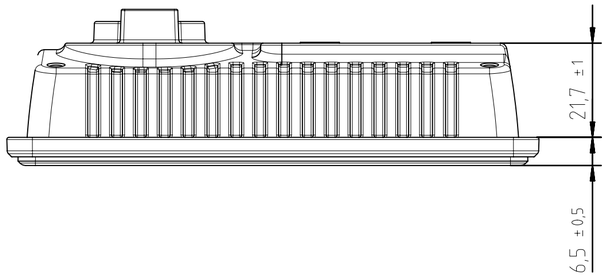

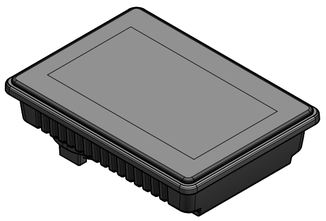

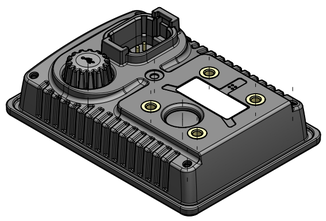

Rev.	Change	Date	Name

Revision History

General note

- All dimensions after painting / coating / plating
- The complete geometry and missing dimensions have to be taken from the 3D-CAD-file
- All applicable documents (see PPAP-Report) have to be considered

All dimensions in millimeters		Projection	Surface quality	
Allowed deviation	Surface		Outer edges	$\sqrt{a1}$
			Inner edges	$\sqrt{a1}$

Scope of application

For this drawing all rights are reserved. Delivery to third party, copying and otherwise misuse is forbidden. (Protection against) Unfair Competition Act

Scale: - (Weight): - kg

Material: -

(Material number): -

	Date	Name
Drawn	04-11-2022	TB
Checked	-	-
Norm	-	-

Part name

OPUS B2 ECO

TOPCON
Topcon Electronics GmbH & Co. KG
Industriestr. 7
65366 Geisenheim
Germany
www.topcon-electronics.de

P/N Topcon Electronics: OPUSB2EN1000X000

Sheet: 1

P/N Topcon: -

Rev.: -

Size: A2

Revisions Topcon			
Rev.	Date	Description	ECO

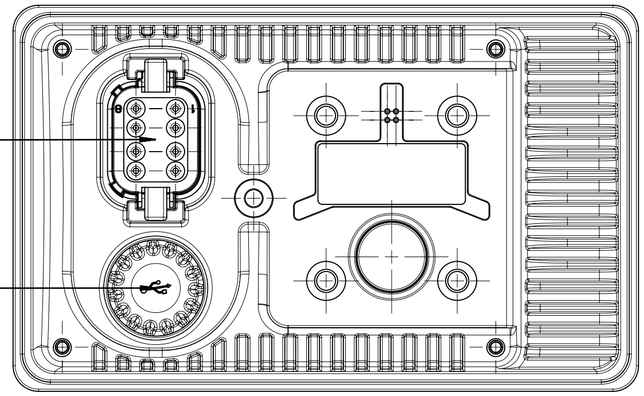

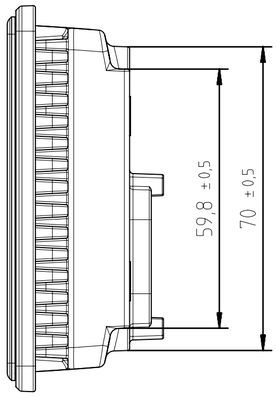

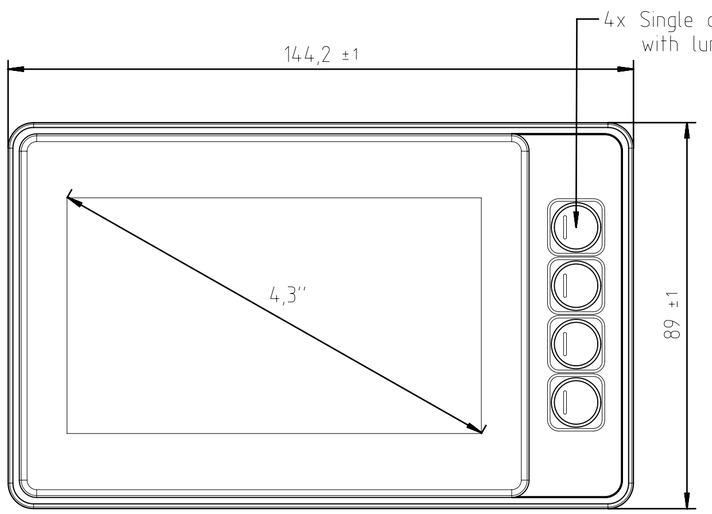

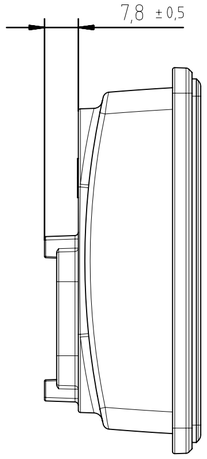

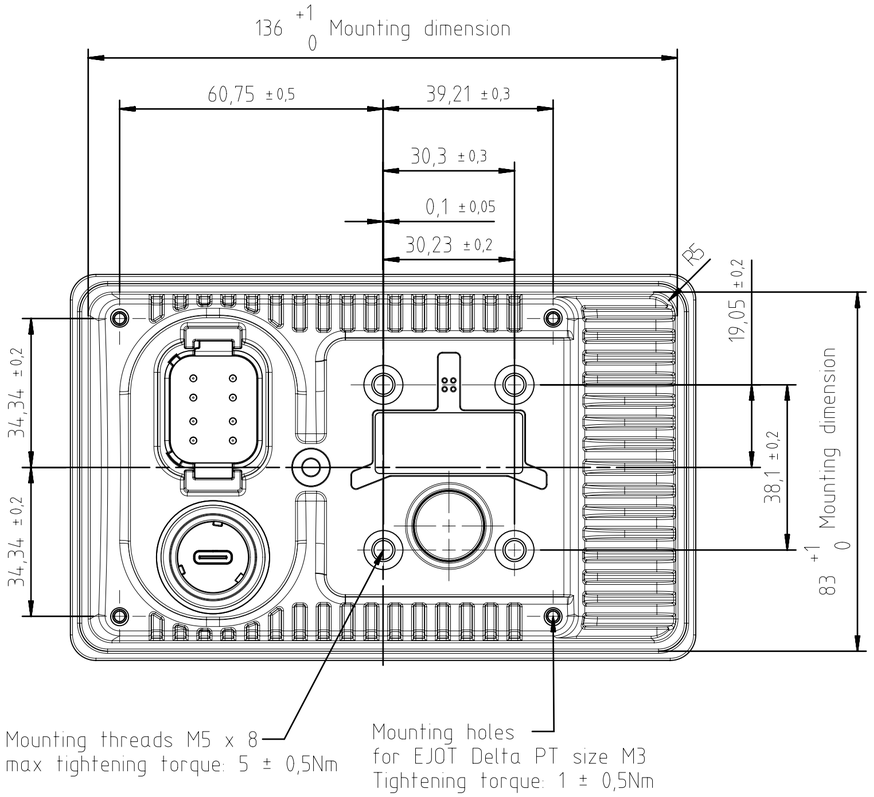

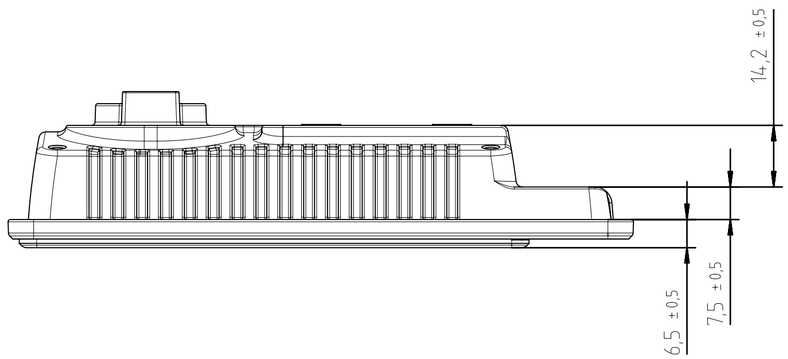



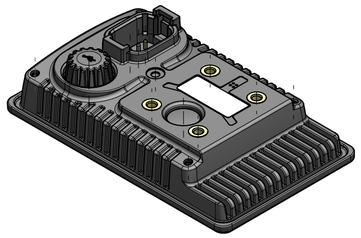

Rev.	Change	Date	Name

Revision History

General note

- All dimensions after painting / coating / plating
- The complete geometry and missing dimensions have to be taken from the 3D-CAD-file
- All applicable documents (see PPAP-Report) have to be considered

All dimensions in millimeters		Projection	Surface quality
Allowed deviation	Surface		Outer edges: $\sqrt{}^{G1}$
			Inner edges: $\sqrt{}^{G1}$

Scope of application

For this drawing all rights are reserved. Delivery to third party, copying and otherwise misuse is forbidden. (Protection against) Unfair Competition Act

Scale: - (Weight): - kg

Material: -

(Material number): -

	Date	Name
Drawn	04-11-2022	TB
Checked	04-11-2022	DZ
Norm	-	-

Part name

OPUS B2 STANDARD

TOPCON

Topcon Electronics GmbH & Co. KG
Industriestr. 7
65366 Geisenheim
Germany
www.topcon-electronics.de

P/N Topcon Electronics: OPUSB2SN10000000

Sheet: 1

P/N Topcon: -

Rev.: -

Size: A2