Industriestraße 24 ▪ 65366 Geisenheim ▪ Germany
www.topcon-electronics.de ▪ dl-opus-info@topcon.com

Technical Data Sheet

OPUS B4 Eco



1. Notes and Warnings

Attention!
This description is not a substitution for the concerned product's documentation. Please do read the documentation including the manuals carefully before dealing with this product. If the safety instructions in the documentation are not followed dangerous situation can occur that can result in damages, injuries and/or death by high voltage or wrong handling. In case you do not have the correct documentation, you can order it by contacting opus-support@topcon.com. Only properly trained personnel with the correct qualification is allowed to handle the device.

Attention!
Do not open the housing to avoid danger to high voltage. Before touching the electric assemblies make sure that the electricity is switched off completely. If the front panel is broken the device needs to be taken out of service due to risk of injury. If perceivable damages on the device exist that can compromise the functionality, it must be taken out of service due to the danger of malfunctions. These particularly include damages to the LCD display, damages to the keyboard, damages that compromise the protection level and damages to the encoder knobs.

Please note:
All content is subject to change without notice. Errors and omissions excepted.

- Mounting and Handling
- Do not use the cable as a handle to carry the device.
- Mounting in clean working environment only.
- Do not mount the device under the use of violence because it can cause damage.
- The device must be mounted by trained personnel only into especially designed and tested system.
- The device may not be opened or disassembled.
- The device is to be cleaned with a moist fuzz free cotton cloth. If necessary, a mild cleaning agent may be used. Do not use acid or abrasive cleaning agents.
- The device is to be stored in a cool and dry environment and to be protected against sunshine.
- If the environmental temperature is beneath 10°C the reaction time of the display increases.

2. General Information

	OPUS B4 Eco Basic	OPUS B4 Eco Full
Order Number: CAN=C++/Projektor CDS=Codesys ISO=ISO-VT CWV=Codesys WebVisu UTx=Topcon Horizon	OPUSB4EN1CANT000 OPUSB4EN1CDST000 OPUSB4EN1ISOT000	OPUSB4EN1CANF000 OPUSB4EN1CANA000 OPUSB4EN1CDSF000 OPUSB4EN1ISOF000 OPUSB4EN1CWVF000 OPUSB4EN1UTSF000 OPUSB4EN1UTLF000
Dimensions	202 x 132 x 49 mm	
Weight	~770 g	
Housing	Aluminum die cast, powder coated	
Mounting	landscape or portrait standalone in-dash	

3. Display

	OPUS B4 Eco Basic	OPUS B4 Eco Full
Type:	TFT Color Graphic LCD with LED backlight	
Size:	7”, 152,4 (W) x 91,44 mm (H)	
Resolution:	800 x 480 px (WVGA), 15:9	
Colors:	16,7 Mio.	
Brightness:	typ. 800 cd/m²	
Contrast Ratio:	typ. 700:1	
Optical Bonding:	yes	

4. Input Devices

	OPUS B4 Eco Basic	OPUS B4 Eco Full
Touch	PCT	
Keypad	N/A	
Indicators and Sensors	Light sensor 1 Multicolor LED	

5. Electronics

	OPUS B4 Eco Basic	OPUS B4 Eco Full
CPU	NXP i.MX6® Solo, 800MHz	NXP i.MX6® Dual, 800MHz
Mass storage	4 GByte (minus space for OS & application)	
RAM	512 MB	1 GB
EEPROM	2.816 Byte, 1.024 Byte available for user	
RTC	Buffered by gold cap Buffered for 2 weeks at T ambient Deviation: max. 1s/day	
Speaker	Up to 90dB @10cm distance (@1kHz) (max. @ ~8kHz),	
Frequency range (operating)	900 Hz to 20 kHz	
Power Supply	System supplied through terminal 30 (battery +, see pinout) and 31 (battery -, see pinout). Terminal 15 (ignition) to be used to switch on/off. Operating voltage range: 8 … 36 V DC. Short circuit protection. Over-voltage protection up to 48 V for max. 5 min. Inverse polarity protection up to -48 V DC for max. 5 min.	

Current consumption (without external load), max

Power Mode	Current at 12 V	Current at 24 V
On	≤ 700 mA	≤ 400 mA
Low Power	280 – 700 mA	150 – 400 mA
Sleep	≤ 110 mA	≤ 60 mA
Off	≤ 5 mA	≤ 5 mA

6. Interfaces

	OPUS B4 Eco Basic	OPUS B4 Eco Full
CAN Bus	2 x CAN-Interface according to ISO 11898, CAN-specification 2.0 B active, up to 1 Mbit/s (default 250 Kbit/s, 500 Kbit/s, 750 Kbit/s, 1 Mbit/s)	
RS232	1 x RS232-Interface Type: EIA232 (only RXD, TXD, GND) Speed: max. 115.200 Kbps	
USB	Side connector: 1 x Type A High speed Guaranteed 900 mA @ 5V Back connector: 1 x Type A High speed Guaranteed 900 mA @ 5V	
Video-Interface	1 x analog video input, 1Vss Camera control output (open drain) for special functionality (mirror, shutter, heating etc.) Camera supply output guaranteed 300mA @ 12VDC	
Ethernet Interface	1 x 10/100 Mbit/s Base T	1 x 10/100 Mbit/s Base T Alternative: 1 x Automotive Ethernet Interface 10/100 Mbit/s Base T1
Inputs	N/A	
Outputs	N/A	
Audio	1 x Audio output (left, right, GND) AC97 compatible Output power: approx. 50mW	
Wake-Input	Input which can be used for Silent-Wake-On of the OPUS to reduce visible boot-time	

7. Connectors

	OPUS B4 Eco Basic	OPUS B4 Eco Full
Main	Tyco-AMP 1437288-6 Mating connector (customer) Tyco-AMP 3-1437290-7 Mating crimp contact (customer) Tyco AMP 3-1447221-4 For industrial use cable length should be less than 30m	
Video	M12 round connector, female, 5-pole, B-coded acc. to EN 61076-2-101	
Ethernet	M12 round connector, female, 4-pole, D-coded acc. to EN 61076-2-101	

8. Software

	OPUS B4 Eco Basic	OPUS B4 Eco Full
Operating System	Linux Kernel 6.0.0 or higher	
Application Programming	OPUS Projektor Tool CODESYS 3.x C/C++ ISO-VT	

9. Testing and Verification

CE-Compliance

EU Directive 2014/30/EU (EMC) according to:

- EN 13766-1: Earth-moving and building construction machinery - Electromagnetic compatibility (EMC) of machines with internal electrical power supply - Part 1: General EMC requirements under typical electromagnetic environmental conditions
- EN ISO 14982: Agricultural and forestry machinery - Electromagnetic compatibility - Test methods and acceptance criteria
- EN 50498: Electromagnetic compatibility (EMC). Product family standard for aftermarket electronic equipment in vehicles
- EN 61000-6-2: Electromagnetic compatibility (EMC) - Generic standards - Immunity for industrial environments
- EN 61000-6-4: Electromagnetic compatibility (EMC). Generic standards. Emission standard for industrial environments

EMC Emission radiated

30-75 MHz	62-52[1] dB(µV/m) – QP – 120kHz
	52-42[1] dB(µV/m) – AV – 120kHz
75-400 MHz	52-63[2] dB(µV/m) – QP – 120kHz
	42-53[2] dB(µV/m) – AV – 120kHz
400-1000 MHz	63 dB(µV/m) – QP – 120kHz
	53 dB(µV/m) – AV – 120kHz
1000-2500 MHz	73 dB(µV/m) – P – 120kHz
	53 dB(µV/m) – AV – 120kHz
2500-6000 MHz	80 dB(µV/m) – P – 1000kHz
	60 dB(µV/m) – AV – 1000kHz

QP: Quasi-Peak

AV: Average

P: Peak

1: Value decreases linearly with the logarithm of the frequency.

2: Value increases linearly with the logarithm of the frequency.

EMC Immunity radiated

20MHz to 800MHz with amplitude modulation 800MHz to 6GHz with pulse modulation

30V/m for the radiated field (absorber lined chamber) testing method (ISO 11452-2) in vertical and horizontal polarization

OR/AND

60mA for the Bulk Current Injection (BCI) testing method (ISO 11452-4)

EMC Emission conducted

	12V-System (Maximum values)	**24V-System** (Maximum values)
	Positive slow pulses: +37V	Positive slow pulses: +37V
	Negative slow pulses: -75V	Negative slow pulses: -150V
	Positive fast pulses: +75V	Positive fast pulses: +150V
	Negative fast pulses: -112V	Negative fast pulses: -150V
	12 V-System	**24 V- System**
Test Pulse 1	Us = 112 V; FS: C	Us=-450V; FS: C
Test Pulse 2a	Us=+55V; FS: B	Us=+55V; FS: B
Test Pulse 2b	Us=+10V; FS: C	Us=+20V; FS: C
Test Pulse 3a	Us=-165V; FS: A	Us=-220V; FS: A
Test Pulse 3b	Us=+112V; FS: A	Us=+220V; FS: A
Test Pulse 4 (Starting profile)	Us_6=6V; Us=6.5 V FS: B	Us_6=6V; Us=10V FS: B
Load Dump	Us=+79V; FS: C	Us=+151V; FS: C

FS: Function Status

Electrostatic Discharge

+/- 8kV contact discharge; FS: A

+/- 15kV air discharge; FS: A

EMC Susceptibility conducted

Frequency: 150kHz–80MHz; U=10V; AM: 1kHz, 80%; FS: A

Burst

t_r=5ns; t_d=50ns; Burst duration: 15ms;

Period: 300ms; t=5min; FS: B

Power-lines: U_S=+/-2kV

Signal-lines: U_S=+/-1kV

Surge

t_r=1.2us; t_d=50us; Amount: 5; Wait-time: 60s; FS: B

Power-lines: U_S=+/-0.5kV

E1 – Type approval

EU Directive ECE R 10

Protection Level (IP Code)

IP 66 according to ISO 20653: Road Vehicles – Degrees of protection (IP-Code) – Protection of electrical equipment against foreign objects, water and access

FCC

„This device complies with part 15 of the FCC Rules. Operation is subject to the following two conditions: (1) This device may not cause harmful interference, and (2) this device must accept any interference received, including interference that may cause undesired operation. “

Electrical

12 and 24V-Systems according to:

Inverse Polarity resistance

5min @ -48V (no defect)

Over voltage resistance

5min @ +48V (no defect)

Start behavior

Start over Temperature

Start at TRoom; decrease in 5°steps to TMin; go to TRoom; increase in 5°steps to THigh; Start DUT at each T; Successful start expected

Short circuit strength

Connect each Pin of Main-, Video- and Ethernet-Connector for 5 Min to GND and for 5 Min to 36V; FS: C

Superimposed alternating voltage

Triangle signal, frequency sweep: 50Hz-25kHz-50Hz inside 60s; FS: A

Level	12V	24V
AC peak-to-peak U_{PP1}	1VAC	4VAC
AC peak-to-peak U_{PP2}	2VAC	4VAC
AC peak-to-peak U_{PP3}	4VAC	10VAC

De-/Increase Supply Voltage

Sweep Voltage UMin-0V-UMin with 0.5V/min; FS: D

Drop in Supply Voltage

12V System	24V System
$U_{Start}=U_{Min}$; $U_S=4.5V$ $t_d=100ms$; FS: B	$U_{Start}=U_{Min}$; $U_S=9V$ $t_d=100ms$; FS: B

Batteryless Operation

12V System	24V System
$U_1=10V$; $U_2=18V$; t=5min; FS: A	$U_1=20V$; $U_2=38V$; t=5min; FS: A

Mechanical

Vibration, noise

Frequency [Hz]	PSD [(m/s2)/Hz]
10	18
20	36
30	36
141	1.64
200	1.93
300	1
2000	1

32h per Axis; FS: A

Vibration, sinusoidal

Resonance sweep

Frequency	Displacement	Acceleration
2 Hz	+/- 1 mm (2 mm PtP)	(0.016 g)
10 Hz	-	2g
2000 Hz	-	2g

1 Octave/minute, 30min per resonance

Endurance Test:

Frequency	Displacement]	Acceleration
5 Hz	+/- 0.75 mm (1.5 mm PtP)	(0.075 g)
57,6 Hz	-	5g
2000 Hz	-	5g

0.5 Octave/minute, 8h per axis, FS: A

Mechanical shock

Part 1: 300m/s², 18ms, 10 times per axis/direction; FS: A

Part 2: 500m/s², 11ms, 3 times per axis/direction; FS: A

Part 3: 500m/s², 6ms, 10 times per axis/direction; FS: A

Part 4: 400m/s², 6ms, 4000 times per axis/direction; FS: A

Drop Test

Drop the DUT on each side and each edge from a height of 1m on a concrete floor.

No damage or visible damage

Package Drop

Drop the DUT inside the package on each side and each edge from a high of 1m on a concrete floor.

No damage of the DUT

No cracks to the package

Climate

Salt spray resistance

Part 1: 7 cycles at 24h (8h spraying; 16h rest) salt concentration: 5%

Part 2: 4 cycles at 168h; 4 cycle:

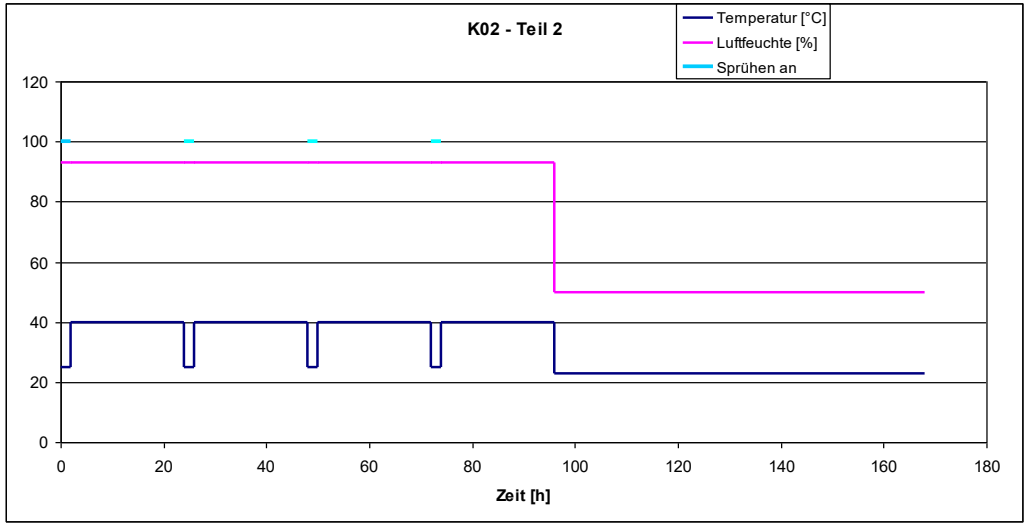

Chemical resistance

Apply once a day, for three days, the following chemicals with a brush over the exposed surface.

Inspect without rinsing immediately after-wards and after 100h.

Alcohol, Antifreeze liquid (Ethyl-glycol), Diesel oil, Domestic Ammonia, Gasoline, Hydraulic oil 10W40, Liquid lime, Motor oil, NPK Chemical fertilizers 20 10 20, Windscreen cleaning mixture, Ammonium Nitrate and Ammonium Phosphate fertilizers, Bovine Effluent - (up to 5% propionic acid), Diesel fuel, STOU (Super Tractor Universal Oil) lubricating oil.

Damp heat steady

21days @+40°C and 93%r.H.; FS: C

Damp heat cyclic

6 cycles (each 24h); TLow=+25°C; THigh=+55°C

Humidity: >= 93%r.H.; FS: A

Temperature/Humidity cyclic

10 cycles (each 24h); TLow=-10°C; THigh=+65°C

Humidity: = 80-96%r.H or uncontrolled.; FS: A

Operating temperature	**Storage temperature**
24h @ -30°C; FS: A	24h @ -40°C; FS: C
96h @ +75°C; FS: A	48h @ +85°C; FS: C

Temperature cycling

10 cycles (each 24h); TLow=-10°C; THigh=+65°C

Humidity: = 80-96%r.H or uncontrolled.; FS: A

Temperature shock

100 cycles (each 2h); TLow=-30°C; THigh=+75°C; Tchange: <30s; FS: C

UV resistance

Over-all time: 1500h

Cycle: 8h UV at +60°C, 4h 95%r.H.; No material damage, No visible change

10. Pinout

Main connector

Pin No.	Assignment	Description
1	VCC	supply voltage +; terminal 30
2	Ignition Input	ignition input; terminal 15
3	GND	supply voltage -; terminal 31
4	Wake	Wake Input, “Doorswitch”
5	Audio Out L	audio output, left channel
6	Audio Out R	audio output, right channel
7	Audio GND	audio ground
8	CAN1H	CAN 1 high
9	CAN1L	CAN 1 low
10	CAN2H	CAN 2 high
11	CAN2L	CAN 2 low
12	n.c.	Not connected
13	n.c.	Not connected
14	n.c.	Not connected
15	n.c.	Not connected
16	RS232 RxD	RS232 receive data
17	RS232 TxD	RS232 transmit data
18	RS232 GND	RS232 GND
19	n.c.	Not connected
20	n.c.	Not connected
21	n.c.	Not connected
22	n.c.	Not connected
23	SERV_EN	service enable
24	n.c.	Not connected
25	n.c.	Not connected
26	n.c.	Not connected

View on the rear side of the B4

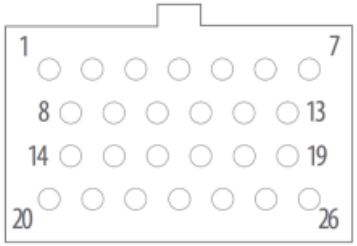

OPUS displays in the industrial sector are only intended to be used with cable length less than 30 meters.

Video connector

Pin No.	Assignment
1	VidSig +
2	Switch
3	Power 12 V
4	Power GND
5	VidSig GND

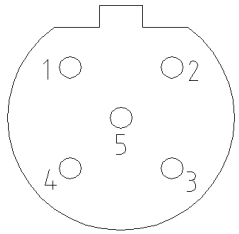

Video- Connector, M12, female, 5 pins, b-coded,

Ethernet connector

Industrial Ethernet

Pin No.	Assignment
1	TD+
2	RD+
3	TD-
4	RD-

Automotive Ethernet

Pin No.	Assignment
1	D+
2	n.c.
3	D-
4	n.c.

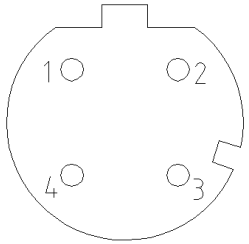

Ethernet Connector, M12, female, 4 pins, d-coded,

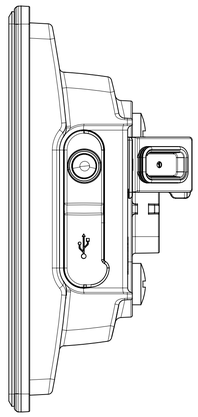

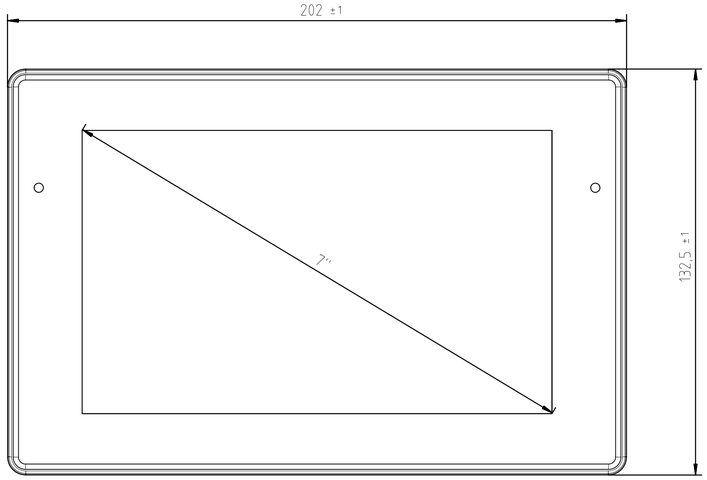

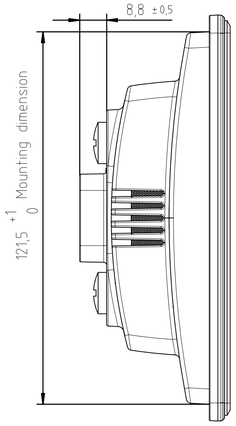

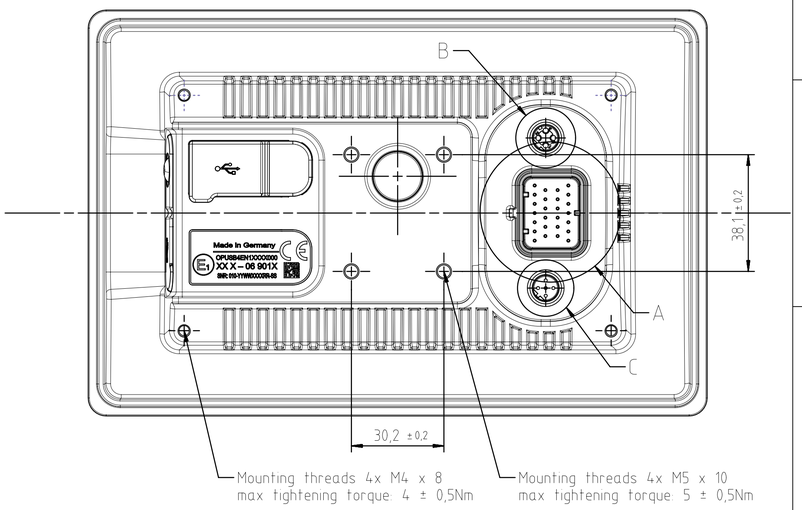

SCALE 2:1

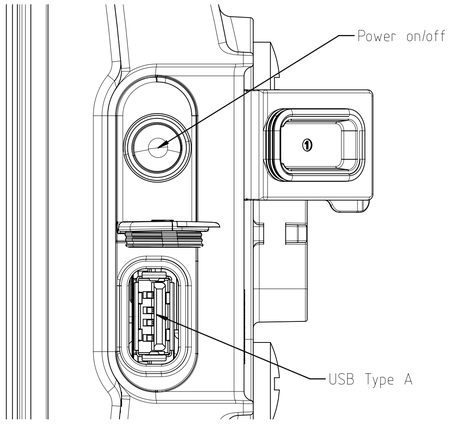

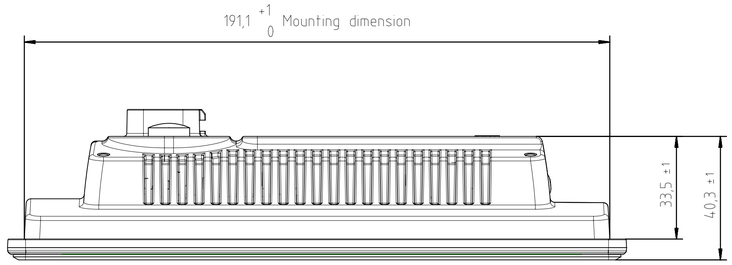

DETAIL B
(SCALE 2:1)

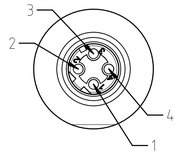

Pin Assignment M12x1 Ethernet D-coded	
Pin	assignment
Pin 1	TD+
Pin 2	RD+
Pin 3	TD-
Pin 4	RD-

Pin Assignment M12x1 Ethernet Automotive D-coded	
Pin	assignment
Pin 1	D+
Pin 2	-
Pin 3	D-
Pin 4	-

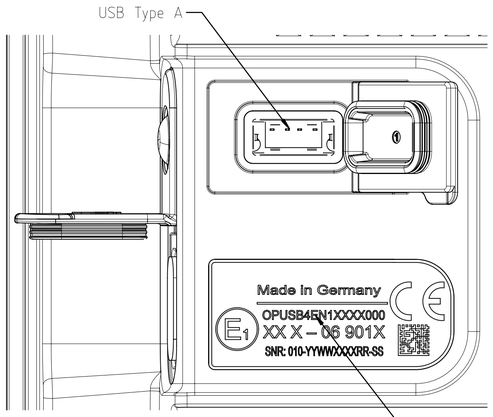

SCALE 2:1

A
(2:1)

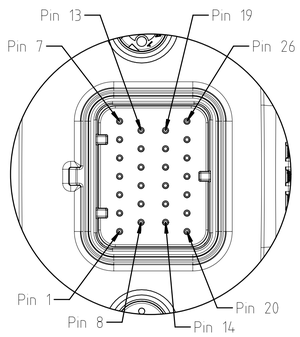

Mating Connector type:
Tyco Electronics AMP
Super Seal 3-1437290-7

Pin assigment		
Pin	assigment	description
1	VCC	Supply, Clamp 30
2	Ignition	Supply, Clamp 15
3	GND	Supply, Clamp 31
4	Wake	Wake Input, Doorswitch
5	Audio_Out_L	Audio line out, Stereo
6	Audio_Out_R	Audio line out, Stereo
7	Audio_GND	Audio line out, Ground
8	CAN_1_H	CAN 1 - High
9	CAN_1_L	CAN 1 - Low
10	CAN_2_H	CAN 2 - High
11	CAN_2_L	CAN 2 - Low
12	-	-
13	-	-
14	-	-
15	-	-
16	RS232_RxD	RS232 Receive data
17	RS232_TxD	RS232 Transmit data
18	RS232_GND	RS232 Ground
19	-	-
20	-	-
21	-	-
22	-	-
23	ENA	Service-Enable
24	-	-
25	-	-
26	-	-

DETAIL C
(SCALE 2:1)

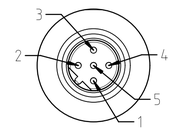

Pin Assignment M12x1 Video B-coded	
Pin	assignment
Pin 1	VidSig +
Pin 2	Switch
Pin 3	Power 12V
Pin 4	Power GND
Pin 5	VidSig GND

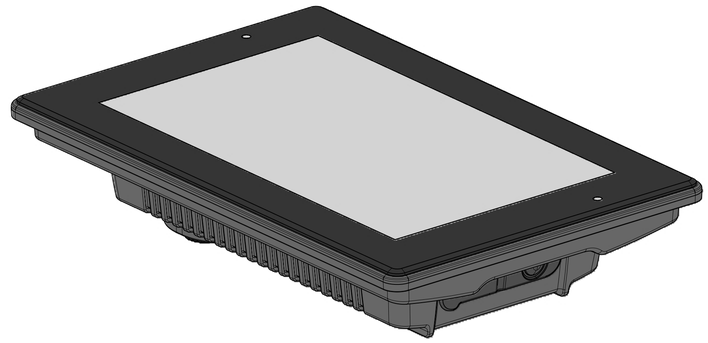

Rev.	Change	Date	Name
Revision History			

General note
- All dimensions after painting / coating / plating
- The complete geometry and missing dimensions have to be taken from the 3D-CAD-file
- All applicable documents (see PPAP-Report) have to be considered

All dimensions in millimeters	Projection	Surface quality
Allowed deviation: Surface DIN EN ISO 1302		Outer edges / Inner edges

Scope of application

For this drawing all rights are reserved. Delivery to third party, copying and otherwise misuse is forbidden (Protection against) Unfair Competition Act

Scale: 1:1 , 2:1 (Weight): - kg

Material: -

(Material number): -

	Date	Name
Drawn	01.09.2021	VG
Checked	-	-
North	-	-

Part name: OPUS B4 Eco

Topcon Electronics GmbH & Co. KG
Industriestr. 7
65366 Geisenheim
Germany
www.Topcon-electronics.de

PN Topcon Electronics: all OPUSB4ENXXXXXXXX Variants — Sheet: 1

PN Topcon: - — Rev.: - — Size: A1